US Department of Transportation
Federal Aviation Administration

MAJOR REPAIR AND ALTERATION
(Airframe, Powerplant, Propeller, or Appliance)

Form Approved OMB No. 2120-0020 11/30/2007

Electronic Tracking Number

For FAA Use Only

INSTRUCTIONS: Print or type all entries. See Title 14 CFR §43.9, Part 43 Appendix B, and AC 43.9-1 (or subsequent revision thereof) for instructions and disposition of this form. This report is required by law (49 U.S.C. §44701). Failure to report can result in a civil penalty for each such violation. (49 U.S.C. §46301(a))

1. Aircraft	Nationality and Registration Mark: 1947 N2950	Serial No.: J-13	
	Make: Grumman	Model: G-73	Series:
2. Owner	Name *(As shown on registration certificate)*: Hamilton, Steven T	Address *(As shown on registration certificate)*: Address 4970 Energy Way; City Reno; State NV; Zip 89502; Country USA	

3. For FAA Use Only

4. Type		5. Unit Identification			
Repair	Alteration	Unit	Make	Model	Serial No.
☐	☒	AIRFRAME	—	*(As described in Item 1 above)*	—
☐	☐	POWERPLANT			
☐	☐	PROPELLER			
☐	☐	APPLIANCE	Type / Manufacturer		

6. Conformity Statement

A. Agency's Name and Address	B. Kind of Agency	
Name: Aviation Classics, Ltd.	☐ U. S. Certificated Mechanic	☐ Manufacturer
Address: Reno-Stead Airport	☐ Foreign Certificated Mechanic	C. Certificate No.
City: Reno State: NV	☒ Certificated Repair Station	NA3R703L
Zip: 89506 Country: USA	☐ Certificated Maintenance Organization	

D. I certify that the repair and/or alteration made to the unit(s) identified in item 5 above and described on the reverse or attachments hereto have been made in accordance with the requirements of Part 43 of the U.S. Federal Aviation Regulations and that the information furnished herein is true and correct to the best of my knowledge.

Extended range fuel per 14 CFR Part 43 App. B ☐

Signature/Date of Authorized Individual: February 12, 2018 Dale Dekker

7. Approval for Return to Service

Pursuant to the authority given persons specified below, the unit identified in item 5 was inspected in the manner prescribed by the Administrator of the Federal Aviation Administration and is ☒ Approved ☐ Rejected

BY								
		FAA Flt. Standards Inspector		Manufacturer		Maintenance Organization		Persons Approved by Canadian Department of Transport
		FAA Designee	X	Repair Station		Inspection Authorization		Other *(Specify)*

Certificate or Designation No.: NA3R703L

Signature/Date of Authorized Individual: February 12, 2018 Dale Dekker

NOTICE

Weight and balance or operating limitation changes shall be entered in the appropriate aircraft record. An alteration must be compatible with all previous alterations to assure continued conformity with the applicable airworthiness requirements.

8. Description of Work Accomplished
(If more space is required, attach additional sheets. Identify with aircraft nationality and registration mark and date work completed.)

Nationality and Registration Mark	Date
1947 N2950	02/12/2018

Installed a Garmin GDL 88 ADS-B Transceiver p/n:011-02369-00, s/n:22T005369, in accordance with theGarmin GDL 84/88 STC Installation Manual p/n:190-01310-00, Rev.9, dated March 31, 2016, powered by a 5 amp circuit breaker, labeled "ADS-B" and interfaces to the Flight Stream 110, the GNS 430W, and the GTX 330. Installed a Garmin Flight Stream This installation is a follow on to STC SA SA02119SE. The installed ADS-B system was shown to meet the equipment perforformance requirements of 14 CFR part 91.227. ---------- END ----------

☐ Additional Sheets Are Attached

US Department of Transportation
Federal Aviation Administration

MAJOR REPAIR AND ALTERATION
(Airframe, Powerplant, Propeller, or Appliance)

OMB No. 2120-0020
Exp: 8/31/2014

Electronic Tracking Number

For FAA Use Only

INSTRUCTIONS: Print or type all entries. See Title 14 CFR §43.9, Part 43 Appendix B, and AC 43.9-1 (or subsequent revision thereof) for instructions and disposition of this form. This report is required by law (49 U.S.C. §44701). Failure to report can result in a civil penalty for each such violation. (49 U.S.C. §46301(a))

1. Aircraft	Nationality and Registration Mark: N2950	Serial No.: J-13	
	Make: Grumman	Model: G-73	Series:
2. Owner	Name *(As shown on registration certificate)*: Hamilton, Steven T	Address *(As shown on registration certificate)*: Address 4970 Energy Way; City Reno; State NV; Zip 89502; Country USA	

3. For FAA Use Only

The Data herein complies with applicable airworthiness requirements and is approved only for the above described aircraft, subject to conformity inspection by a person authorized in FAR 43.7
Donald F. Morgan, Reno DSDO WP11, 10/07/2015

Donald F Morgan

4. Type		5. Unit Identification			
Repair	Alteration	Unit	Make	Model	Serial No.
☐	☒	AIRFRAME	—	*(As described in Item 1 above)*	—
☐	☐	POWERPLANT			
☐	☐	PROPELLER			
☐	☐	APPLIANCE	Type / Manufacturer		

6. Conformity Statement

A. Agency's Name and Address	B. Kind of Agency	
Name: Arnold Peterson	☒ U. S. Certificated Mechanic	☐ Manufacturer
Address: 2323 P-51 CT	☐ Foreign Certificated Mechanic	C. Certificate No.
City: Minden; State: NV	☐ Certificated Repair Station	A&P2264277
Zip: 89423; Country: USA	☐ Certificated Maintenance Organization	

D. I certify that the repair and/or alteration made to the unit(s) identified in item 5 above and described on the reverse or attachments hereto have been made in accordance with the requirements of Part 43 of the U.S. Federal Aviation Regulations and that the information furnished herein is true and correct to the best of my knowledge.

Extended range fuel per 14 CFR Part 43 App. B ☐

Signature/Date of Authorized Individual: 10-7-15

7. Approval for Return to Service

Pursuant to the authority given persons specified below, the unit identified in item 5 was inspected in the manner prescribed by the Administrator of the Federal Aviation Administration and is ☒ Approved ☐ Rejected

BY								
	☐	FAA Flt. Standards Inspector	☐	Manufacturer	☐	Maintenance Organization	☐	Persons Approved by Canadian Department of Transport
	☐	FAA Designee	☐	Repair Station	X	Inspection Authorization		Other (Specify)

Certificate or Designation No. 2264277

Signature/Date of Authorized Individual: 10-7-15

FAA Form 337 (10/06)

NOTICE

Weight and balance or operating limitation changes shall be entered in the appropriate aircraft record. An alteration must be compatible with all previous alterations to assure continued conformity with the applicable airworthiness requirements.

8. Description of Work Accomplished
(If more space is required, attach additional sheets. Identify with aircraft nationality and registration mark and date work completed.)

N2950	10-5-2015
Nationality and Registration Mark	Date

Installed Hartzell Engine Technologies 7655T Skytronics alternator kits on Pratt & Whitney R1340 engines.

Alternators kits installed using original hardware, location, wiring, attached Skytronics wiring diagram, attached Maintenance instructions, attached drawing, and attached trouble shooting for 24 volt negative ground alternator.

All work done in accordance with AC43.13-1B/2B Chapter 11, Section 3, 4, 5, 8.

Weight and Balance revised to reflect alternator installation.

For continued airworthiness see attached Skytronics Maintenance instructions for Jasco Alternator System.

Alternator system is STC approved under SH191WE, SH194WE, SH2303SW, and SA348NW for other aircraft installations.

----------end----------

[✓] Additional Sheets Are Attached

Troubleshooting the JASCO alternator

ALTERNATOR SYSTEM TEST

1. SYSTEMS VOLTAGE TESTS - HOW TO START!

To aid in troubleshooting the Jasco Alternator System or to check out a new installation, the following voltage measurements, monitored at application system locations, will define to the operator proper system performance prior to start-up. To insure reasonable results, the operator should use a voltmeter, which is within calibration limits.

The schematics in figures 2 and 4 depict the location of voltmeter in the system to monitor the applicable voltage levels. The voltage readings indicated are for reference purposes, as actual values are dependent upon the level or storage state of your battery.

Use figure 2 for all 12 volt JASCO Alternator Systems with internal spike protection Regulator J12M20SP.

Use figure 4 for all 24 volt JASCO Alternator Systems with internal spike protection Regulator J12M24SP.

IF YOU HAVE AN OLDER MODEL REGULATOR CALL FOR DIFFERENT SCHEMATIC. 800-421-6846

When performing the measurement tests listed on figures 2 & 4, the following conditions should exist: Engine stopped; Battery switch closed; Alternator/Field switch closed.

2. ADDITIONAL CHECKS - IS THE PROTECTOR DEFECTIVE?

Check for a shorted suppressor or protector. If you have an old style external protector (SVP-3, SVP-4) in line, disconnect the protector and observe system function. Proper operation indicates a defective protector. On units with combined Regulator/Protector systems, simply disconnect the orange lead from the regulator and measure resistance between the orange and black leads. Resistance for 24 Volt systems should be not less than 1500 OHMS and 12 Volt systems should not read lower than 1200 OHMS.

3. ADDITIONAL CHECKS - IS ALTERNATOR DEFECTIVE?

Isolate the alternator and check for output. Turn the master switch of the aircraft to the "OFF" position, disconnect the Voltage Regulator and external protectors (SVP-3 or SVP-4) if still in use. *To insure reasonable results, the operator should use a hand held voltmeter, which is within calibration limits.*

Caution: ***Failure to disconnect the Voltage Regulator, Voltage Protector or the Voltage Controller (Regulator and Protector combined) will result in damage to these units and voids warranty.*** This can be accomplished by disconnecting the green and red wire at the alternator post(s). ***Turn off all accessory equipment (all electrical loads).*** Connect a jumper wire from a battery voltage source directly to the field (green wire post/terminal) of the alternator -***alligator clamps recommended, do not hard wire; jumper should be connected after start of engine.*** Be sure this connection makes a direct circuit to the alternator field terminal. You are now ready to operate the alternator in an un-regulated state. Turn the master switch to the "ON" position and start the engine. Increase engine RPM to ensure the alternator shaft speed is over 3000 RPM. Connect jumper –alligator clamp to field post. With hand held volt meter quickly take voltage measurements at auxiliary (red wire post) of alternator to ground.

Caution: System damage can result if the alternator is operated for over 45 seconds with the jumper wire connected during this troubleshooting test. Failure to comply with this requirement voids warranty.

Full current output rating of the alternator should occur, and 2 to 3 times the system voltage should occur. If not, then the alternator is defective. If full output is observed, the alternator is good and either the wiring or the regulator is probably defective.

SKYTRONICS IS THE ONLY FAA AUTHORIZED REPAIR STATION FOR THE JASCO ALTERNATOR SYSTEMS. For further information please refer to diagram.

sales@skytronicsinc.com©

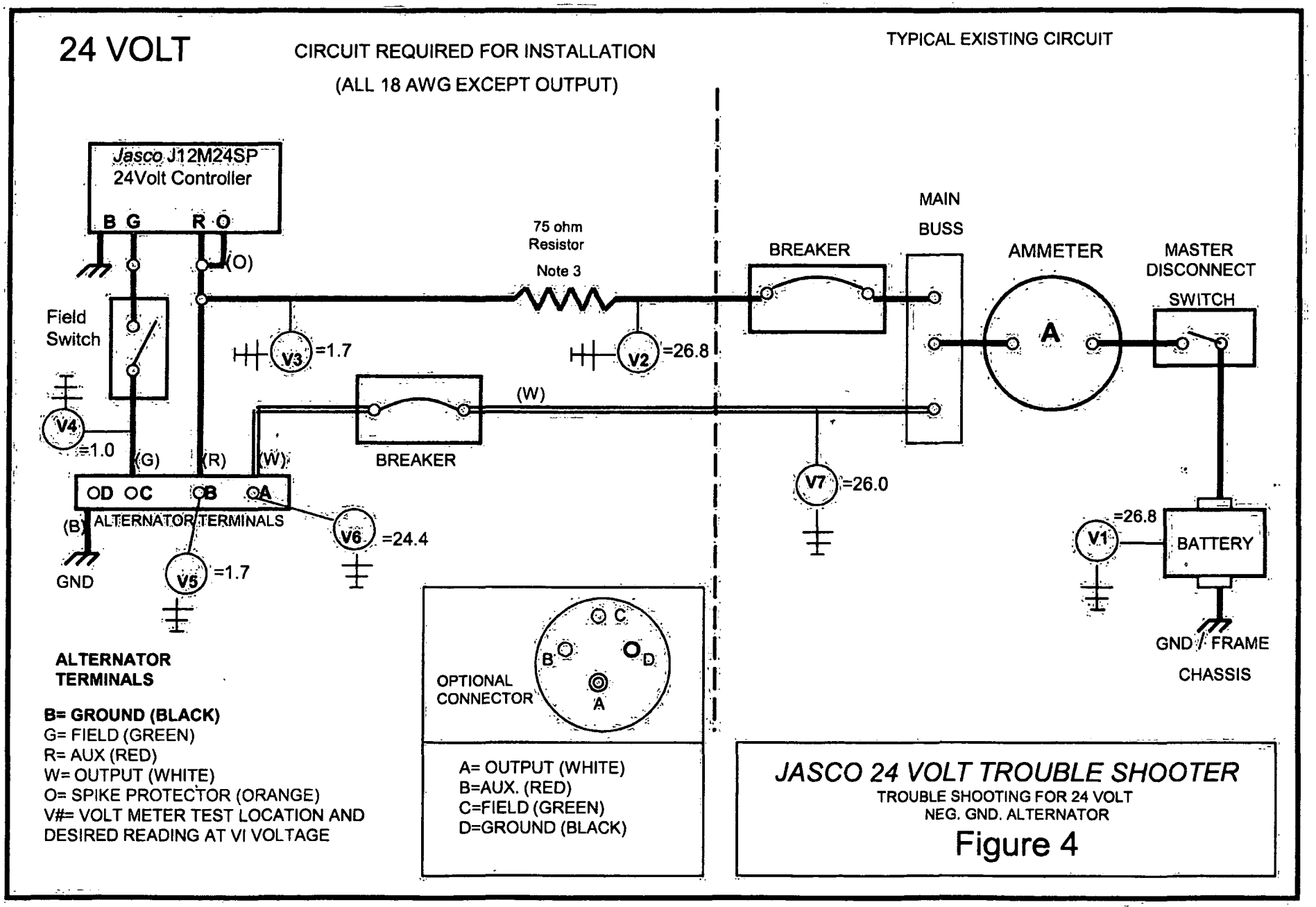
24 VOLT
CIRCUIT REQUIRED FOR INSTALLATION
(ALL 18 AWG EXCEPT OUTPUT)
TYPICAL EXISTING CIRCUIT
Jasco J12M24SP
24Volt Controller
B G R O
(O)
75 ohm
Resistor
Note 3
BREAKER
MAIN
BUSS
AMMETER
MASTER
DISCONNECT
SWITCH
Field
Switch
V3 =1.7
V2 =26.8
V4
=1.0
(W)
BREAKER
(G) (R) (W)
OD OC OB OA
(B) ALTERNATOR TERMINALS
GND
V5 =1.7
V6 =24.4
V7 =26.0
V1 =26.8
BATTERY
GND / FRAME
CHASSIS
ALTERNATOR
TERMINALS
B= GROUND (BLACK)
G= FIELD (GREEN)
R= AUX (RED)
W= OUTPUT (WHITE)
O= SPIKE PROTECTOR (ORANGE)
V#= VOLT METER TEST LOCATION AND
DESIRED READING AT VI VOLTAGE
OPTIONAL
CONNECTOR
C
B
D
A
A= OUTPUT (WHITE)
B=AUX. (RED)
C=FIELD (GREEN)
D=GROUND (BLACK)
JASCO 24 VOLT TROUBLE SHOOTER
TROUBLE SHOOTING FOR 24 VOLT
NEG. GND. ALTERNATOR
Figure 4

SKYTRONICS
INCORPORATED

Maintenance Instructions for the Jasco Alternator System

Compared to the best generator, the **Jasco** Alternator is lighter, more reliable, delivers more power, and requires less maintenance. In addition, you can extend the life of your **Jasco** charging systems by following these basic maintenance instructions.

1. Inspect ram air inlet for obstructions prior to flight as part of your walk around.

2. Remove gear driven alternators every **250** hours and inspect rubber drive gear bushings for alignment, wear, or deformity. If damage is discovered, these inexpensive parts can be purchased from **Skytronics** to extend the life of your charging system. Install new bushings in the reverse order of removal. Torque nut P/N AN320-5 or nut P/N 5239 to 15-20 ft. lbs.

3. Minor adjustment of system charging and voltage can be accomplished by adjusting the regulator variable resistor, located under the white protective cap on your **Jasco** regulator. The variable resistor is very sensitive and requires only a slight adjustment to bring system voltage to required levels. Your **Jasco** charging system is factory set, and should require no adjustment out of the box.

4. For abnormal operations including blown circuit breakers, failed fuses, erratic charging, no output or over voltage problems, contact the **Skytronics Inc**. service department at **1-800-421-6846**. We offer **free** factory evaluation including bench check of both alternator and controller. In addition, our factory overhaul of your **Jasco** charging system carries the same warranty as a new system. **Skytronics, Inc.** is the only factory authorized repair station for your **Jasco** charging system, accept no substitute.

5. To ensure normal operation of your **Jasco** Alternator and Controller: Upon **1000 hours** of operation it is recommended to return your units to the factory for a complete inspection, testing and/or overhaul.

Skytronics is the only **FAA Approved** facility for repairs and/or overhauls of the **Jasco** Alternator Systems.

227 Oregon St. P.O.Box 807 El Segundo, CA 90245 FAA Repair Station AE3R368L
Tel: (310)322-6284 (800)421-6846 Fax:(310)322-6160 www.skytronicsinc.com

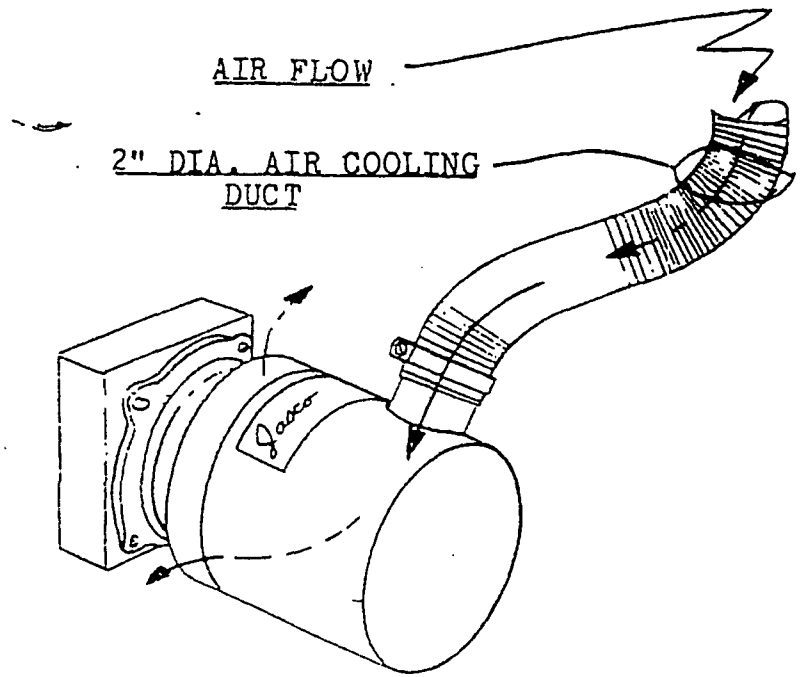

TYPICAL COOLING FOR JASCO ALTERNATOR

HELICOPTER APPLICATION

ROUTE AIR COOLING DUCT TO COOLING SHROUD: SUPPORT DUCT TO PREVENT OBSTRUCTION TO AIR FLOW.

FIXED WING APPLICATION

ROUTE RAM AIR COOLING DUCT TO RAM AIR COOLING INLET: SUPPORT DUCT TO PREVENT OBSTRUCTION TO AIR FLOW.

COOLING INLET SHOULD BE EXTERNAL TO AIRCRAFT ENGINE COMPARTMENT AIR. IT IS RECOMMENDED TO PROVIDE A SEPARATE AIR SCOOP INLET TO RAM AIR COOLING DUCT. (DO NOT CONNECT TO HEATER BOX.)

CAUTION

DO NOT OPERATE ALTERNATOR WITHOUT SUPPLYING ADEQUATE COOLING AIR TO THE ALTERNATOR. OPERATING ALTERNATOR WITHOUT ADEQUATE COOLING WILL DAMAGE ALTERNATOR. OPERATION OF ALTERNATOR WITHOUT ADEQUATE COOLING VOIDS WARRANTY.

SKYTRONICS, INC.
EL SEGUNDO, CALIF.

MATERIAL	DATE 12/22/78	DWN. BY HP
SPEC.	SCALE	APPR. BY JES
FINISH	DIMENSION TOLERANCE ± .005 UNLESS OTHERWISE SPECIFIED	

RECOMMENDED COOLING FOR JASCO ALTERNATOR INSTALLATION.

DWG. NO. 5016

24 VOLT

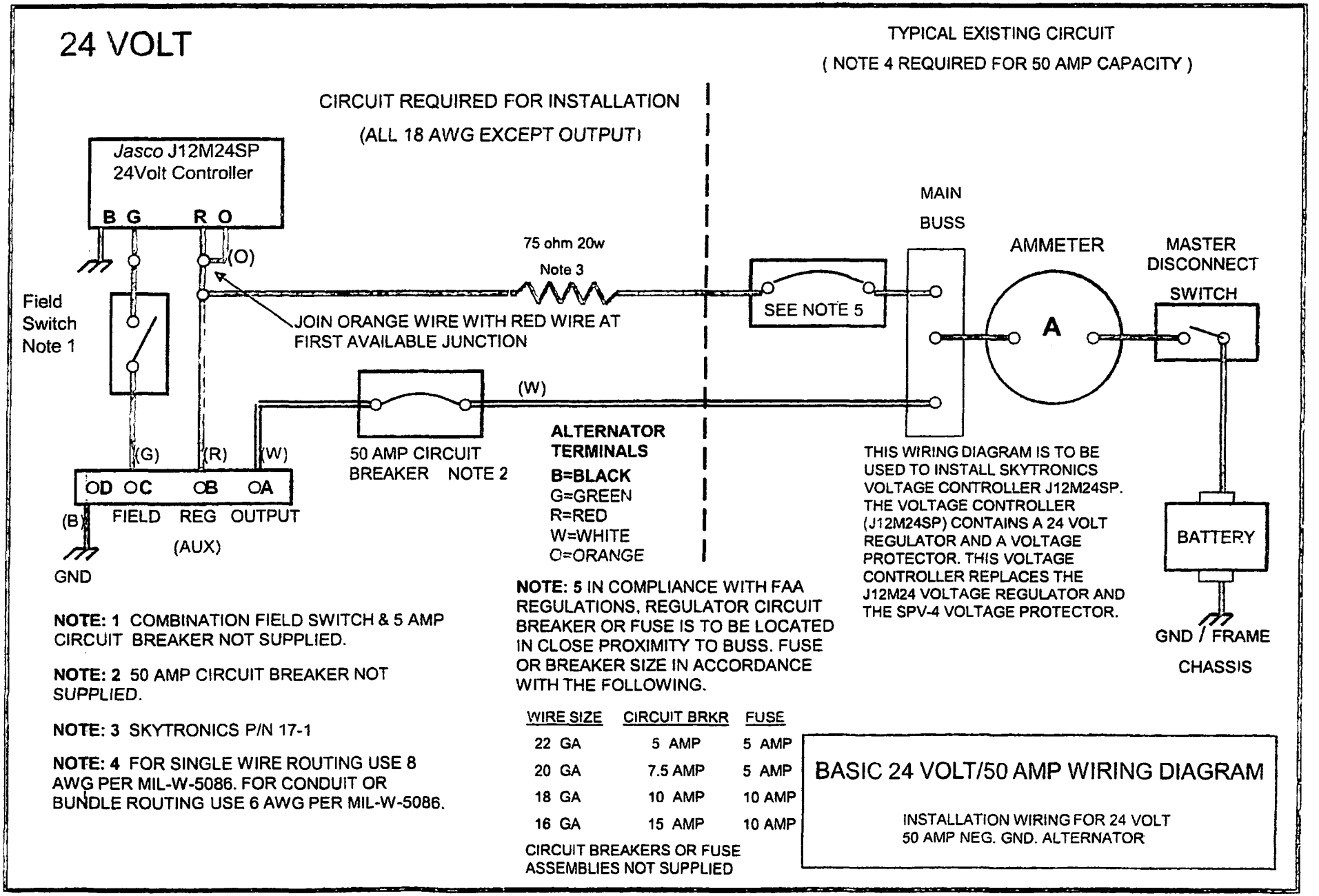

NOTE: 1 COMBINATION FIELD SWITCH & 5 AMP CIRCUIT BREAKER NOT SUPPLIED.

NOTE: 2 50 AMP CIRCUIT BREAKER NOT SUPPLIED.

NOTE: 3 SKYTRONICS P/N 17-1

NOTE: 4 FOR SINGLE WIRE ROUTING USE 8 AWG PER MIL-W-5086. FOR CONDUIT OR BUNDLE ROUTING USE 6 AWG PER MIL-W-5086.

NOTE: 5 IN COMPLIANCE WITH FAA REGULATIONS, REGULATOR CIRCUIT BREAKER OR FUSE IS TO BE LOCATED IN CLOSE PROXIMITY TO BUSS. FUSE OR BREAKER SIZE IN ACCORDANCE WITH THE FOLLOWING.

WIRE SIZE	CIRCUIT BRKR	FUSE
22 GA	5 AMP	5 AMP
20 GA	7.5 AMP	5 AMP
18 GA	10 AMP	10 AMP
16 GA	15 AMP	10 AMP

CIRCUIT BREAKERS OR FUSE ASSEMBLIES NOT SUPPLIED

BASIC 24 VOLT/50 AMP WIRING DIAGRAM

INSTALLATION WIRING FOR 24 VOLT
50 AMP NEG. GND. ALTERNATOR

UNITED STATES OF AMERICA
DEPARTMENT OF TRANSPORTATION—FEDERAL AVIATION ADMINISTRATION

STANDARD AIRWORTHINESS CERTIFICATE

1. NATIONALITY AND REGISTRATION MARKS	2. MANUFACTURER AND MODEL	3. AIRCRAFT SERIAL NUMBER	4. CATEGORY
N2950	GRUMMAN G-73	J-13	STANDARD TRANSPORT

5. AUTHORITY AND BASIS FOR ISSUANCE

This airworthiness certificate is issued pursuant to the Federal Aviation Act of 1958 and certifies that, as of the date of issuance, the aircraft to which issued has been inspected and found to conform to the type certificate therefor, to be in condition for safe operation, and has been shown to meet the requirements of the applicable comprehensive and detailed airworthiness code as provided by Annex 8 to the Convention on International Civil Aviation, except as noted herein.

Exceptions:

NONE

6. TERMS AND CONDITIONS

Unless sooner surrendered, suspended, revoked, or a termination date is otherwise established by the Administrator, this airworthiness certificate is effective as long as the maintenance, preventative maintenance, and alterations are performed in accordance with Parts 21, 43, and 91 of the Federal Aviation Regulations, as appropriate, and the aircraft is registered in the United States.

DATE OF ISSUANCE	FAA REPRESENTATIVE	DESIGNATION NUMBER
R 05-30-80	Jerry E. Roberts, PMI	WP11 RNO FSDO

Any alteration, reproduction, or misuse of this certificate may be punishable by a fine not exceeding $1,000, or imprisonment not exceeding 3 years, or both. THIS CERTIFICATE MUST BE DISPLAYED IN THE AIRCRAFT IN ACCORDANCE WITH APPLICABLE FEDERAL AVIATION REGULATIONS.

FAA Form 8100-2 (8-82)

* U.S. G.P.O.:1998 669-038

UNITED STATES OF AMERICA

DEPARTMENT OF TRANSPORTATION—FEDERAL AVIATION ADMINISTRATION

STANDARD AIRWORTHINESS CERTIFICATE

1. NATIONALITY AND REGISTRATION MARKS	2. MANUFACTURER AND MODEL	3. AIRCRAFT SERIAL NUMBER	4. CATEGORY
N-2442H	GRUMMAN G-73	J-13	STANDARD TRANSPORT

5. AUTHORITY AND BASIS FOR ISSUANCE

This airworthiness certificate is issued pursuant to the Federal Aviation Act of 1958 and certifies that, as of the date of issuance, the aircraft to which issued has been inspected and found to conform to the type certificate therefor, to be in condition for safe operation, and has been shown to meet the requirements of the applicable comprehensive and detailed airworthiness code as provided by Annex 8 to the Convention on International Civil Aviation, except as noted herein.

Exceptions:

NONE

"N" number Change.

6. TERMS AND CONDITIONS

Unless sooner surrendered, suspended, revoked, or a termination date is otherwise established by the Administrator, this airworthiness certificate is effective as long as the maintenance, preventative maintenance, and alterations are performed in accordance with Parts 21, 43, and 91 of the Federal Aviation Regulations, as appropriate, and the aircraft is registered in the United States.

DATE OF ISSUANCE	FAA REPRESENTATIVE	DESIGNATION NUMBER
REPLACEMENT 5-30-80	EARL E. FRANCIS	SO-FSDO-19

Any alteration, reproduction, or misuse of this certificate may be punishable by a fine not exceeding $1,000, or imprisonment not exceeding 3 years, or both. THIS CERTIFICATE MUST BE DISPLAYED IN THE AIRCRAFT IN ACCORDANCE WITH APPLICABLE FEDERAL AVIATION REGULATIONS.

US Department of Transportation
Federal Aviation Administration

MAJOR REPAIR AND ALTERATION
(Airframe, Powerplant, Propeller, or Appliance)

Form Approved
OMB No. 2120-0020

For FAA Use Only

Office Identification
AFS-640

INSTRUCTIONS: Print or type all entries. See FAR 43.9, FAR 43 Appendix B, and AC 43.9-1 (or subsequent revision thereof) for instructions and disposition of this form. This report is required by law (49 U.S.C. 1421). Failure to report can result in civil penalty not to exceed $1,000 for each such violation (Section 901 Federal Aviation Act of 1958).

1. Aircraft	Make GRUMMAN	Model G73
	Serial No. J13	Nationality and Registration Mark NC2950
2. Owner	Name *(As shown on registration certificate)* STEVE HAMILTON	Address *(As shown on registration certificate)* 4970 ENERGY WAY RENO, NEVA 89502

3. For FAA Use Only

4. Unit Identification				5. Type	
Unit	Make	Model	Serial No.	Repair	Alteration
AIRFRAME	*(As described in Item 1 above)*				X
POWERPLANT					
PROPELLER					
APPLIANCE	Type				
	Manufacturer				

6. Conformity Statement

A. Agency's Name and Address	B. Kind of Agency		C. Certificate No.
VICTORIA AIR MAINTENANCE LTD. 9550 CANORA RD. SIDNEY, BC V8L 4R1		U.S. Certificated Mechanic	M103826
	X	Foreign Certificated Mechanic	
		Certificated Repair Station	
		Manufacturer	

D. I certify that the repair and/or alteration made to the unit(s) identified in item 4 above and described on the reverse or attachments hereto have been made in accordance with the requirements of Part 43 of the U.S. Federal Aviation Regulations and that the information furnished herein is true and correct to the best of my knowledge.

Date	Signature of Authorized Individual
JUNE 16, 2000	

7. Approval for Return To Service

Pursuant to the authority given persons specified below, the unit identified in item 4 was inspected in the manner prescribed by the Administrator of the Federal Aviation Administration and is ☐ APPROVED ☐ REJECTED

BY							Other *(Specify)*
		FAA Flt. Standards Inspector		Manufacturer		Inspection Authorization	
		FAA Designee		Repair Station		Person Approved by Transport Canada Airworthiness Group	

Date of Approval or Rejection	Certificate or Designation No.	Signature of Authorized Individual

FAA Form 337 (12-88)

NOTICE

Weight and balance or operating limitation changes shall be entered in the appropriate aircraft record. An alteration must be compatible with all previous alterations to assure continued conformity with the applicable airworthiness requirements.

8. Description of Work Accomplished
(If more space is required, attach additional sheets. Identify with aircraft nationality and registration mark and date work completed.)

-Installed Shadin Fuel Flow Transducer per STC SE999GL,I.A.W. Shadin Installation Instructions.

All work performed I.A.W. Standard Airraft Practices and Procedures and Grumman G-73 Maintenance Manual.

Aircraft Re-Weighed and New Weight and Balance Report Compiled this Date.

**********END**********

☐ Additional Sheets Are Attached

U.S.G.P.O. 1990-761-753

United States of America
Department of Transportation — Federal Aviation Administration

Supplemental Type Certificate

Number SE999GL

This certificate issued to

Shadin Company, Inc.
6950 Wayzata Boulevard
Minneapolis, MN 55426

certifies that the change in the type design for the following product with the limitations and conditions therefor as specified herein meets the airworthiness requirements of ~~Part~~ Type ~~XXXX~~ Certificate #5E-1 Regulations.

Original Product — Type Certificate Number: 5E-1
Make: Pratt and Whitney
Model: R-1340-36, -40, -47, -49, -49M1, -51, -51M1, -53, -57, -AN-1, -AN-2

Description of Type Design Change:

Installation of a Shadin Company Fuel Flow Transducer in accordance with Shadin Company Report Number 4096 dated January 9, 1986, or other FAA approved revision.

Limitations and Conditions:

This approval should not be extended to other engines of this model that incorporate any other previously approved modification, unless it is determined that the interrelationship between this change and any other previously approved modification will introduce no adverse effect on the airworthiness of these engines.

This certificate and the supporting data which is the basis for approval shall remain in effect until surrendered, suspended, revoked, or a termination date is otherwise established by the Administrator of the Federal Aviation Administration.

Date of application: January 9, 1986 Date reissued

Date of issuance: February 20, 1986 Date amended.

By direction of the Administrator

W. F. Horn (Signature)
Manager, Chicago Aircraft Certification Office
Central Region, ACE-115C
(Title)

FEDERAL AVIATION ADMINISTRATION

Any alteration of this certificate is punishable by a fine of not exceeding $1,000, or imprisonment not exceeding 3 years, or both.

This certificate may be transferred in accordance with FAR 21.47.

FAA Form 8110-2 (10-68)

US Department of Transportation
Federal Aviation Administration

MAJOR REPAIR AND ALTERATION
(Airframe, Powerplant, Propeller, or Appliance)

Form Approved
OMB No. 2120-0020

For FAA Use Only

Office Identification

INSTRUCTIONS: Print or type all entries. See FAR 43.9, FAR 43 Appendix B, and AC 43.9-1 (or subsequent revision thereof) for instructions and disposition of this form. This report is required by law (49 U.S.C. 1421). Failure to report can result in civil penalty not to exceed $1,000 for each such violation (Section 901 Federal Aviation Act of 1958).

1. Aircraft	Make GRUMMAN	Model G73
	Serial No. J13	Nationality and Registration Mark NC2950
2. Owner	Name *(As shown on registration certificate)* STEVE HAMILTON	Address *(As shown on registration certificate)* 4970 ENERGY WAY RENO, NEVA 89502

3. For FAA Use Only

4. Unit Identification				**5. Type**	
Unit	Make	Model	Serial No.	Repair	Alteration
AIRFRAME	*(As described in Item 1 above)*				X
POWERPLANT					
PROPELLER					
APPLIANCE	Type				
	Manufacturer				

6. Conformity Statement

A. Agency's Name and Address	B. Kind of Agency		C. Certificate No.
VICTORIA AIR MAINTENANCE LTD. 9550 CANORA RD. SIDNEY, BC V8L 4R1		U.S. Certificated Mechanic	M103826
	X	Foreign Certificated Mechanic	
		Certificated Repair Station	
		Manufacturer	

D. I certify that the repair and/or alteration made to the unit(s) identified in item 4 above and described on the reverse or attachments hereto have been made in accordance with the requirements of Part 43 of the U.S. Federal Aviation Regulations and that the information furnished herein is true and correct to the best of my knowledge.

Date	Signature of Authorized Individual
JUNE 16, 2000	

7. Approval for Return To Service

Pursuant to the authority given persons specified below, the unit identified in item 4 was inspected in the manner prescribed by the Administrator of the Federal Aviation Administration and is ☐ APPROVED ☐ REJECTED

BY							Other *(Specify)*
		FAA Flt. Standards Inspector		Manufacturer		Inspection Authorization	
		FAA Designee		Repair Station		Person Approved by Transport Canada Airworthiness Group	

Date of Approval or Rejection	Certificate or Designation No.	Signature of Authorized Individual

FAA Form 337 (12-88)

NOTICE

Weight and balance or operating limitation changes shall be entered in the appropriate aircraft record. An alteration must be compatible with all previous alterations to assure continued conformity with the applicable airworthiness requirements.

8. Description of Work Accomplished
(If more space is required, attach additional sheets. Identify with aircraft nationality and registration mark and date work completed.)

-Recovered All Cabin Seats in Leather & Wool Fabric
-Installed New Sidewall Panels with same materials
-Installed New Carpet Throughout Cabin

All Materials Meet FAR 25.853(a) Apendix F part 1(a) (1)(ii)-Headliner
FAR 25.853(a)Amendment 25-83 Appendix F Part 1(a) 1(ii)-Leather
FAR 25.853(d) (3) (ii) Appendix F(d)-Carpet

All work performed I.A.W. Standard Airraft Practices and Procedures and Grumman G-73 Maintenance Manual.

Aircraft Re-Weighed and New Weight and balance Report Compiled this Date.

**********END**********

☐ Additional Sheets Are Attached

Spinneybeck

FAA VERTICAL BURN TEST RESULTS

CUSTOMER: Devlin Upholstery DATE: 03/07/00

ORDER#: 200500135 CUST. PO#: Verbal W/O#: 6383

SPECIMEN IDENTIFICATION: SA 0832 DYELOT#: 103385

TEST BEING CONDUCTED: FAR 25.853 (a) APPENDIX F

PART I (a) (1) (ii) - 12 SECONDS

CONDITIONING SPECIFICATIONS: TEMPERATURE: 70° ±5° F

HUMIDITY: 55% ±5 RH

CONDITIONING STARTED: DATE: 03/06/00 TIME: 01:54:

CONDITIONING COMPLETED: DATE: 03/07/00 TIME: 02:26:

TESTING PERFORMED: DATE: 03/07/00

FLAME TEMPERATURE: 1550°F min. ACTUAL:

RESULTS:

	EXTINGUISH TIME	DRIPPINGS FLAME TIME	CHAR LENGTH
SPECIMEN #1:	1.0 sec	0.0 sec	1.6"
SPECIMEN #2:	1.0 sec	0.0 sec	1.6"
SPECIMEN #3:	1.0 sec	0.0 sec	1.6"
AVERAGE:	1.0 sec	0.0 sec	1.6"

PASSED [XXX] FAILED [ ]

COMMENTS:

TEST PERFORMED BY:

REV. 5/95

ORIGINAL

U.S. DEPARTMENT OF TRANSPORTATION
FEDERAL AVIATION ADMINISTRATION

STATEMENT OF COMPLIANCE WITH THE FEDERAL AVIATION REGULATIONS

DATE: 03/07/00

AIRCRAFT OR AIRCRAFT COMPONENT IDENTIFICATION

MAKE	MODEL NO.	TYPE (Airplane, Radio, Helicopter, etc.)	NAME OF APPLICANT
N/A	N/A	N/A	Davlin Upholstery

LIST OF DATA

IDENTIFICATION	TITLE
STD# 3000 Rev 3	Spinneybeck Vertical Burn Test Plan
W/O#: 6383	Spinneybeck Leather
	Type: SA
	Color: 0832
	Dyelot: 103385

PURPOSE OF DATA

Demonstration of compliance with material flammability requirements. "Witness Burn Test Only." Conformity was performed: NO

APPLICABLE REQUIREMENTS *(List specific sections)*

FAR 25.853(a), Amendment 25-83, Appendix F, Part I (a)(1)(ii)

CERTIFICATION - Under authority vested by direction of the Administrator and in accordance with conditions and limitations of appointment under Part 183 of the Federal Aviation Regulations, data listed above and on attached sheets numbered _____ _____ have been examined in accordance with established procedures and found to comply with applicable requirements of the Federal Aviation Regulations.

I (We) Therefore ☐ Recommend approval of these data
☒ Approved these data

SIGNATURE(S) OF DESIGNATED ENGINEERING REPRESENTATIVE(S)	DESIGNATION NUMBER(S)	CLASSIFICATION(S)
Robert Conti	DERY-955010-NE	Systems & Equipment
Jack Wolf	DERY-955132-NE	Systems & Equipment

KGT

Y-422/99

12 SECOND VERTICAL FLAMMABILITY TEST RESULTS

CUSTOMER: LONSEAL, INC

CUSTOMER PO # 99236 INVOICE # 1290C

LOCATION: STOCK FLAME RETARDANT: N/A

CONDITIONING ROOM:

DATE/TIME IN: 11-17-99 1230 HRS DATE/TIME OUT: 11-18-99 1920HRS

AVERAGE (MIN 24 HOURS)

TEMP: 70 DEGREES F REL HUM: 49%

TEST SAMPLE DESCRIPTION: LONSEAL: Vinyl, Loneoin II, #154 Flecks, Lot # LA-16/99
Backing, F/G Mesh, 100 Mil Nominal Thickness

FLAME APPLICATION (SECONDS)	FLAME TIME (SECONDS)		BURN LENGTH (INCHES)		BURN DRIPPINGS (SECONDS)	
	WARP	FILL	WARP	FILL	WARP	FILL
12	10.2		1.3		0.0	
12	10.6		1.3		0.0	
12	3.0		1.3		0.0	
AVERAGE	7.9		1.3		0.0	

NOTE: Burn test performed in accordance with FAR 25.853(a) Appendix F Part I (a), (1), (ii) which includes floor covering, textiles, (including draperies and upholstery) seat cushions, padding decorative and nondecorative coated fabrics, leather, trays, galley furnishings, acoustical insulation, or liners of Class B through E cargo or baggage compartments.

12 Second vertical burn test must meet the following conditions: Average Self Extinguish Flame Time may not exceed 15 seconds, Average Burn Length may not exceed 8 inches, and Average Burn of Drippings may not exceed 5 seconds after falling.

COMMENTS:

CONDITION OF TEST: PASSED X FAILED ____

SIGNED: DATE: November 18, 1999

KEITH GAWSYSZAWSKI DER CHI-456

KGTFORM2

KG TESTING
11507 Bradwell Road
Garfield Hts. Ohio 44125

DEPARTMENT OF TRANSPORTATION
FEDERAL AVIATION ADMINISTRATION

STATEMENT OF COMPLIANCE WITH THE FEDERAL AVIATION REGULATIONS

DATE: NOVEMBER 14, 1999

AIRCRAFT OR AIRCRAFT COMPONENT IDENTIFICATION

MAKE	MODEL NO.	TYPE (Airplane, Radio, Helicopter, etc.)	NAME OF APPLICANT
STOCK	N/A	N/A	LONSEAL, INC.

LIST OF DATA

IDENTIFICATION	TITLE
WORK ORDER 1290C PO Number #99236	LONSEAL, INC.: Vinyl, LONCOIN II, # 154 Flecks Lot # LA-16/99 Backing, F/G Mesh 100 Mil Nominal Thickness

PURPOSE OF DATA

DEMONSTRATION OF COMPLIANCE WITH MATERIAL FLAMMABILITY TEST REQUIREMENTS ONLY TEST WITNESS ONLY

APPLICABLE REQUIREMENTS (List specific sections)

FAR 25.853(a) Appendix F Part I (a)(1)(ii)

CERTIFICATION - Under authority vested by direction of the Administrator and in accordance with conditions and limitations of appointment under Part 183 of the Federal Aviation Regulations, data listed above and on attached sheets numbered _____ have been examined in accordance with established procedures and found to comply with applicable requirements of the Federal Aviation Regulations.

I (We) Therefore
- ☐ Recommend approval of these data
- ☒ Approve these data

SIGNATURE(S) OF DESIGNATED ENGINEERING REPRESENTATIVE(S)	DESIGNATION NUMBER(S)	CLASSIFICATION(S)
KEITH GAWSYSZAWSKI	CHI-456	STRUCTURAL SPECIAL

FAA Form 8110-3 (11-76) SUPERSEDES PREVIOUS EDITION

SKANDIA, Inc.

5181 Falcon Road • Rockford, Illinois 61109 • Phone 815/227-1611 • Fax 815/227-1920

Client:
TAPIS CORPORATION
28 KAYSAL COURT
ARMONK NY 10504

WO #: 33902-99
Date: 05/20/99
Test Plan #:
PO #: 54889

Aircraft:
STOCK

S/N:
NA

VERTICAL FLAMMABILITY TEST RESULTS

FAR 25.853 (a) Appendix F Part I (a) (1) (ii)

Conditioning Room: Time In: 05/19/99 9:00 AM Time Out: 05/20/99 12:17PM

Specimen Desc.: TAPIS CORPORATION: CARPET, DARLINGTON, P/N 025, KHAKI, REF # 54889

Flame Application (seconds)	Flame Time (seconds)		Burn Length (inches)		Drippings (seconds)	
	Warp	Fill	Warp	Fill	Warp	Fill
12	0.0	0.0	0.5	0.3	0.0	0.0
12	0.0	0.0	0.4	0.4	0.0	0.0
12	0.0	0.0	0.4	0.4	0.0	0.0
Average:	0.0	0.0	0.4	0.4	0.0	0.0

Comments:

Vertical (12 sec.) Burn Test: Average Self-Extinguish time may not exceed 15 sec. Average Burn Length may not exceed 8". Average Dripping may not exceed 5 sec. after falling.

Passed: [X] Failed : [ ]

Signed: Judy Boggs
Judy Boggs

ERT12-4183

TOTAL P.05

U.S. DEPARTMENT OF TRANSPORTATION
FEDERAL AVIATION ADMINISTRATION

STATEMENT OF COMPLIANCE WITH THE FEDERAL AVIATION REGULATIONS

DATE: 05/20/99

AIRCRAFT OR AIRCRAFT COMPONENT IDENTIFICATION

MAKE	MODEL NO.	TYPE (Airplane, Radio, Helicopter, etc.)	NAME OF APPLICANT
STOCK S/N NA	N/A	N/A	Skandia, Inc TAPIS CORPORATION

LIST OF DATA

IDENTIFICATION	TITLE
Work Order # 33902-99 Test ID 16297	TAPIS CORPORATION: CARPET. DARLINGTON. P/N 025, KHAKI, REF # 54889

PURPOSE OF DATA

DEMONSTRATION OF COMPLIANCE WITH MATERIAL FLAMMABILITY REQUIREMENTS

APPLICABLE REQUIREMENTS (List specific sections)

FAR 25.853 (a) Appendix F Part I (a) (1) (ii)

CERTIFICATION -Under authority vested by direction of the Administrator and in accordance with conditions and limitations of appointment under Part 183 of the Federal Aviation Regulations, data listed above and on attached sheets numbered _____ have been examined in accordance with established procedures and found to comply with applicable requirements of the Federal Aviation Regulations.

I (We) Therefore ☐ Recommend approval of these data ☒ Approve these data

SIGNATURE(S) OF DESIGNATED ENGINEERING REPRESENTATIVE	DESIGNATION NUMBER(S)	CLASSIFICATION(S)
Judy Boggs	CHI-410	Structural Special

FAA Form 8110-3 (11-70) SUPERSEDES PREVIOUS EDITION

SKANDIA, Inc.

5181 Falcon Road • Rockford, Illinois 61109 • Phone 815/227-1611 • Fax 815/227-1920

Client:
DOUGLASS INTERIOR PRODUCTS
2000 - 124TH AVENUE NE
BELLEVUE WA 98005

WO #: 30647-99
Date: 03/03/99
Test Plan #:
PO #: 12042

Aircraft:
STOCK

S/N:
NA

VERTICAL FLAMMABLITY TEST RESULTS

FAR 25.853 (a) Appendix F Part I (a) (1) (ii)

Conditioning Room: Time In: 03/02/99 9:00 AM Time Out: 03/03/99 11:00 AM

Specimen Desc.: DOUGLASS INTERIOR PRODUCTS: FABRIC, DEF 9135, P/N 01, NEUTRAL, D/L # 11752, REF 34459-68

Flame Application (seconds)	Flame Time (seconds)		Burn Length (inches)		Drippings (seconds)	
	Warp	Fill	Warp	Fill	Warp	Fill
12	0.0	0.0	1.0	1.0	0.0	0.0
12	0.0	0.0	1.2	0.9	0.0	0.0
12	0.0	0.0	1.0	1.1	0.0	0.0
Average:	0.0	0.0	1.1	1.0	0.0	0.0

Comments:

Vertical (12 sec.) Burn Test: Average Self-Extinguish time may not exceed 15 sec. Average Burn Length may not exceed 8". Average Dripping may not exceed 5 sec. after falling.

Passed: [X] Failed : [ ]

Signed: Judy Boggs

Judy Boggs

VERT12-3879

U.S. DEPARTMENT OF TRANSPORTATION
FEDERAL AVIATION ADMINISTRATION

STATEMENT OF COMPLIANCE WITH THE FEDERAL AVIATION REGULATIONS

DATE: 03/03/99

AIRCRAFT OR AIRCRAFT COMPONENT IDENTIFICATION

MAKE	MODEL NO.	TYPE (Airplane, Radio, Helicopter, etc.)	NAME OF APPLICANT
STOCK S/N NA	N/A	N/A	Skandia, Inc. DOUGLASS INTERIOR PRODUCTS

LIST OF DATA

IDENTIFICATION	TITLE
Work Order # 30647-99 Test ID 14733	DOUGLASS INTERIOR PRODUCTS: FABRIC, DEF 9135, P/N 01, NEUTRAL, D/L # 11752

PURPOSE OF DATA

DEMONSTRATION OF COMPLIANCE WITH MATERIAL FLAMMABILITY REQUIREMENTS

APPLICABLE REQUIREMENTS (List specific sections)

FAR 25.853 (a) Appendix F Part I (a) (1) (ii)

CERTIFICATION -Under authority vested by direction of the Administrator and in accordance with conditions and limitations of appointment under Part 183 of the Federal Aviation Regulations, data listed above and on attached sheets numbered _____ have been examined in accordance with established procedures and found to comply with applicable requirements of the Federal Aviation Regulations.

I (We) Therefore ☐ Recommend approval of these data
☒ Approve these data

SIGNATURE(S) OF DESIGNATED ENGINEERING REPRESENTATIVE	DESIGNATION NUMBER(S)	CLASSIFICATION(S)
Judy Boggs	CHI-410	Structural Special
Judy Boggs		

FAA Form 8110-3 (11-70) SUPERSEDES PREVIOUS EDITION

SKANDIA, Inc.

5181 Falcon Road • Rockford, Illinois 61109 • Phone 815/227-1611 • Fax 815/227-1920

Client:
DOUGLASS INTERIOR PRODUCTS
2000 - 124TH AVENUE NE
BELLEVUE WA 98005

WO #: 29779-99
Date: 02/09/99
Test Plan #:
PO #: 11970

Aircraft:
STOCK

S/N:
NA

VERTICAL FLAMMABILITY TEST RESULTS

FAR 25.853 (a) Appendix F Part I (a) (1) (ii)

Conditioning Room: Time In: 02/08/99 9:00 AM Time Out: 02/09/99 11:00 AM

Specimen Desc.: DOUGLASS INTERIOR PRODUCTS: FABRIC, QUEEN ANNE, P/N 3604, TAUPE, D/L # 28634, REF # 11841

Flame Application (seconds)	Flame Time (seconds)		Burn Length (inches)		Drippings (seconds)	
	Warp	Fill	Warp	Fill	Warp	Fill
12	0.0	2.0	2.7	2.3	0.0	0.0
12	0.0	1.4	2.0	2.8	0.0	0.0
12	18.7	10.6	2.5	2.7	0.0	0.0
Average:	6.2	4.7	2.4	2.6	0.0	0.0

Comments:

Vertical (12 sec.) Burn Test: Average Self-Extinguish time may not exceed 15 sec. Average Burn Length may not exceed 8". Average Dripping may not exceed 5 sec. after falling.

Passed: [X] Failed : [ ]

Signed: Judy Boggs

Judy Boggs

VERT12-3768

U.S. DEPARTMENT OF TRANSPORTATION
FEDERAL AVIATION ADMINISTRATION

STATEMENT OF COMPLIANCE WITH THE FEDERAL AVIATION REGULATIONS

DATE: 02/09/99

AIRCRAFT OR AIRCRAFT COMPONENT IDENTIFICATION

MAKE	MODEL NO.	TYPE (Airplane, Radio, Helicopter, etc.)	NAME OF APPLICANT
STOCK S/N NA	N/A	N/A	Skandia, Inc. DOUGLASS INTERIOR PRODUCTS

LIST OF DATA

IDENTIFICATION	TITLE
Work Order # 29779-99 Test ID 14239	DOUGLASS INTERIOR PRODUCTS: FABRIC, QUEEN ANNE, P/N 3604, TAUPE, D/L # 28634

PURPOSE OF DATA

DEMONSTRATION OF COMPLIANCE WITH MATERIAL FLAMMABILITY REQUIREMENTS

APPLICABLE REQUIREMENTS (List specific sections)

FAR 25.853 (a) Appendix F Part I (a) (1) (ii)

CERTIFICATION -Under authority vested by direction of the Administrator and in accordance with conditions and limitations of appointment under Part 183 of the Federal Aviation Regulations, data listed above and on attached sheets numbered _____ have been examined in accordance with established procedures and found to comply with applicable requirements of the Federal Aviation Regulations.

I (We) Therefore ☐ Recommend approval of these data
☒ Approve these data

SIGNATURE(S) OF DESIGNATED ENGINEERING REPRESENTATIVE	DESIGNATION NUMBER(S)	CLASSIFICATION(S)
Judy Boggs	CHI-410	Structural Special
Judy Boggs		

FAA Form 8110-3 (11-70) SUPERSEDES PREVIOUS EDITION

SKANDIA, Inc.

5181 Falcon Road • Rockford, Illinois 61109 • Phone 815/227-1611 • Fax 815/227-1920

Client:
DOUGLASS INTERIOR PRODUCTS
2000 - 124TH AVENUE NE
BELLEVUE WA 98005

WO #: 29010-99
Date: 01/21/99
Test Plan #:
PO #: 11903

Aircraft: STOCK

S/N: NA

VERTICAL FLAMMABILITY TEST RESULTS

FAR 25.853 (a) Appendix F Part I (a) (1) (ii)

Conditioning Room: Time In: 01/20/99 9:00 AM Time Out: 01/21/99 11:00 A

Specimen Desc.: DOUGLASS INTERIOR PRODUCTS: LEATHER, P/N LL 3864, TULLBARDINE, D/L # 19048, REF 11832

Flame Application (seconds)	Flame Time (seconds)	Burn Length (inches)	Drippings (seconds)
12	0.0	0.4	0.0
12	0.0	0.3	0.0
12	0.0	0.3	0.0
Average:	0.0	0.3	0.0

Comments:

Vertical (12 sec.) Burn Test: Average Self-Extinguish time may not exceed 15 sec. Average Burn Length may not exceed 8". Average Dripping may not exceed 5 sec. after falling.

Passed: [X] Failed : [ ]

Signed: Judy Boggs

Judy Boggs

VERT12NW-14642

U.S. DEPARTMENT OF TRANSPORTATION
FEDERAL AVIATION ADMINISTRATION

STATEMENT OF COMPLIANCE WITH THE FEDERAL AVIATION REGULATIONS

DATE: 01/21/99

AIRCRAFT OR AIRCRAFT COMPONENT IDENTIFICATION

MAKE	MODEL NO.	TYPE (Airplane, Radio, Helicopter, etc.)	NAME OF APPLICANT
STOCK S/N NA	N/A	N/A	Skandia, Inc. DOUGLASS INTERIOR PRODUCTS

LIST OF DATA

IDENTIFICATION	TITLE
Work Order # 29010-99 Test ID 13821	DOUGLASS INTERIOR PRODUCTS: LEATHER, P/N LL 3864, TULLBARDINE, D/L # 19048

PURPOSE OF DATA

DEMONSTRATION OF COMPLIANCE WITH MATERIAL FLAMMABILITY REQUIREMENTS

APPLICABLE REQUIREMENTS (List specific sections)

FAR 25.853 (a) Appendix F Part I (a) (1) (ii)

CERTIFICATION -Under authority vested by direction of the Administrator and in accordance with conditions and limitations of appointment under Part 183 of the Federal Aviation Regulations, data listed above and on attached sheets numbered _____ have been examined in accordance with established procedures and found to comply with applicable requirements of the Federal Aviation Regulations.

I (We) Therefore ☐ Recommend approval of these data
☒ Approve these data

SIGNATURE(S) OF DESIGNATED ENGINEERING REPRESENTATIVE	DESIGNATION NUMBER(S)	CLASSIFICATION(S)
Judy Boggs	CHI-410	Structural Special

FAA Form 8110-3 (11-70) SUPERSEDES PREVIOUS EDITION

Industrial Rubber
& Supply, Inc.

50th Anniversary 1946 - 1996

P.O. BOX 2276 • TACOMA, WA 98401 • (253) 922-1148 • FAX (253) 922-5338

CERTIFICATE OF CONFORMANCE

To: Davline Upholstery
1111 Bewdley Avenue
Victoria, BC V9A 5M9

Date: March 20, 1998

P.O. # 479643

Sir or Madame:

This is to certify that the material furnished has been manufactured, inspected and tested in accordance with purchase order requirements.

Test reports covering subject material indicate conformance with applicable requirements and are on file, available for examination.

Applicable specifications called for by purchase order are:

FAR 25.853 Para B

Quantity:

- CONFOR MED (PINK) 36 x 80 x 1
- CONFOR SOFT (YELLOW) 36 x 80 x 1

Industrial Rubber & Supply, Inc.

By: Max N. Arnold

ULTRAFOAM

Interior Products

CORPORATE OFFICE - 1900 EAST PAWNEE - WICHITA, KS 67211
INT'L 316/262-3496 • NAT'L 800/457-3021 • FAX 316/263-5679

Test Date: 2/10/98
Test Report #: 811197A
Customer: Davlin Upholstery
1111 Bewdley Ave.
Victoria BC CAN V9A 5M9

Customer P.O.#: Verbal

Applicable FAA Requirements: *FAR 23.853 (d) (3) (ii) Appendix F (d)*
FAR 25.853 (a) Appendix F Part I (a) (1) (ii)

12 Sec. Vertical Flammability Test Results

Conditioning Room Time In: 10:00 AM Time Out: 10:00 AM
Date: 2-9-98 Date: 2-10-98

Specimen Description: Ultra Foam
Batch #26330

Sample	Flame Time (seconds)	Self-extinguish (seconds)	Burn Length (inches)	Drippings (seconds)
#1	12	.75	3.00	0
#2	12	0	2.80	0
#3	12	0	2.00	0
Average		0.25	2.60	0.00

Vertical Burn Test (12 Sec.): Average self-extinguish time may not exceed 15 seconds. Average burn length may not exceed 8 ". Average dripping may not exceed 5 seconds after falling.

◉ PASS ○ FAIL

Special Notes or Comments: No drippings

Signed: _____
Jeremy Hobbs - FAA DER

Project No. SP0256WI-Q

U.S. DEPARTMENT OF TRANSPORTATION
FEDERAL AVIATION ADMINISTRATION

STATEMENT OF COMPLIANCE WITH THE FEDERAL AVIATION REGULATIONS

DATE: 2/10/98

AIRCRAFT OR AIRCRAFT COMPONENT IDENTIFICATION

MAKE	MODEL NO.	TYPE (Airplane, Radio, Helicopter, etc.)	NAME OF APPLICANT
Stock	N/A	N/A	Davlin Upholstery

LIST OF DATA

IDENTIFICATION	TITLE
811197A	Ultra Foam Batch #26330 P.O. # Verbal

PURPOSE OF DATA

Demonstration of compliance with FAR material flammability requirements

APPLICABLE REQUIREMENTS (List specific sections)

FAR 23.853 (d) (3) (ii) Appendix F (d)
FAR 25.853 (a) Appendix F Part I (a) (i) (ii)

CERTIFICATION - Under authority vested by direction of the Administrator and in accordance with conditions and limitations of appointment under Part 183 of the Federal Aviation Regulations, data listed above and on attached sheets numbered____ _____ have been examined in accordance with established procedures and found to comply with applicable requirements of the Federal Aviation Regulations.

I (WE) Therefore ☐ Recommend approval of these data
☒ Approve these data

SIGNATURE(S) OF DESIGNATED ENGINEERING REPRESENTATIVES	DESIGNATION NUMBER(S)	CLASSIFICATION(S)
Jeremy Hobbs	KC569	Structures (Interiors)

FAA Form 8110-3 (11-70) SUPERSEDES PREVIOUS EDITION

GPO 901-613

US Department of Transportation
Federal Aviation Administration

MAJOR REPAIR AND ALTERATION
(Airframe, Powerplant, Propeller, or Appliance)

Form Approved
OMB No. 2120-0020

For FAA Use Only

Office Identification
SW159900212

INSTRUCTIONS: Print or type all entries. See FAR 43.9, FAR 43 Appendix B, and AC 43.9-1 (or subsequent revision thereof) for instructions and disposition of this form. This report is required by law (49 U.S.C. 1421). Failure to report can result in a civil penalty not to exceed $1,000 for each such violation (Section 901 Federal Aviation Act of 1958).

1. Aircraft	Make: Grumman	Model: G-73
	Serial No.: J-13	Nationality and Registration Mark: NC2950
2. Owner	Name *(As shown on registration certificate)*: Steve Hamilton	Address *(As shown on registration certificate)*: 4970 Energy Way, Reno, NV 89502

3. For FAA Use Only

The (data/~~alteration~~) identified herein complied with applicable airworthiness requirements and is approved for the above described aircraft subject to conformity inspection by a person authorized in section 43.7 of the FAR.

10/01/98 [signature]

Date — FAA Inspector — SW-OKC-FSDO

4. Unit Identification / **5. Type**

Unit	Make	Model	Serial No.	Repair	Alteration
AIRFRAME	(As described in Item 1 above)				X
POWERPLANT					
PROPELLER					
APPLIANCE	Type				
	Manufacturer				

6. Conformity Statement

A. Agency's Name and Address	B. Kind of Agency	C. Certificate No.
Jeff Molina 1011 N. 2nd Pl. Jenks, OK 74447	X U.S. Certificated Mechanic Foreign Certificated Mechanic Certificated Repair Station Manufacturer	441768867 A&P

D. I certify that the repair and/or alteration made to the unit(s) identified in item 4 above and described on the reverse or attachments hereto have been made in accordance with the requirements of Part 43 of the U.S. Federal Aviation Regulations and that the information furnished herein is true and correct to the best of my knowledge.

Date 10/1/98 [signature]

7. Approval for Return To Service

Pursuant to the authority given persons specified below, the unit identified in item 4 was inspected in the manner prescribed by the Administrator of the Federal Aviation Administration and is ☒ APPROVED ☐ REJECTED

BY						
	FAA Flt. Standards Inspector	Manufacturer	X	Inspection Authorization	Other *(Specify)*	
	FAA Designee	Repair Station		Person Approved by Transport Canada Airworthiness Group		

Date of Approval or Rejection	Certificate or Designation No.	Signature of Authorized Individual
10/1/98	IA478700181	[signature]

FAA Form 337 (12-88)

NOTICE

Weight and balance or operating limitation changes shall be entered in the appropriate aircraft record. An alteration must be compatible with all previous alterations to assure continued conformity with the applicable airworthiness requirements.

8. Description of Work Accomplished

(If more space is required, attach additional sheets. Identify with aircraft nationality and registration mark and date work completed.)

The alteration is located behind the leading edge of the left wing, between the left engine and fuselage (station 45 L.H.). This alteration consist basically of four pulleys and their components. The purpose of this alteration was to keep the fuel mixture cables from touching the fuel selector valve. Another purpose of this alteration was to keep all throttle and mixture cables spaced from each other.

Reference Material:

1)Attached Diagrams

2)Grumman Mallard Amphibian Model G-73, service manual, Issue August 1, 1951 fig. 141 sheet 1 to 6, ACC43.13-1A & 2A, para. 97a; 100b; para. 195;198a,c,d,f. AC65 fig. 2-59 and 2-60. pages 66 and 67.

3)Technical Manual-Structural repair instructions, June 1, 1957-Secretary of Air Force, See Section IX, Appendix 1-repair materials, Appendix II-Typical Repair Illustrations, Appendix III-Grumman Standard Practice.

☒ Additional Sheets Are Attached

☆U.S.G.P.O. 1990-761-753

NC 2950
9/18/98

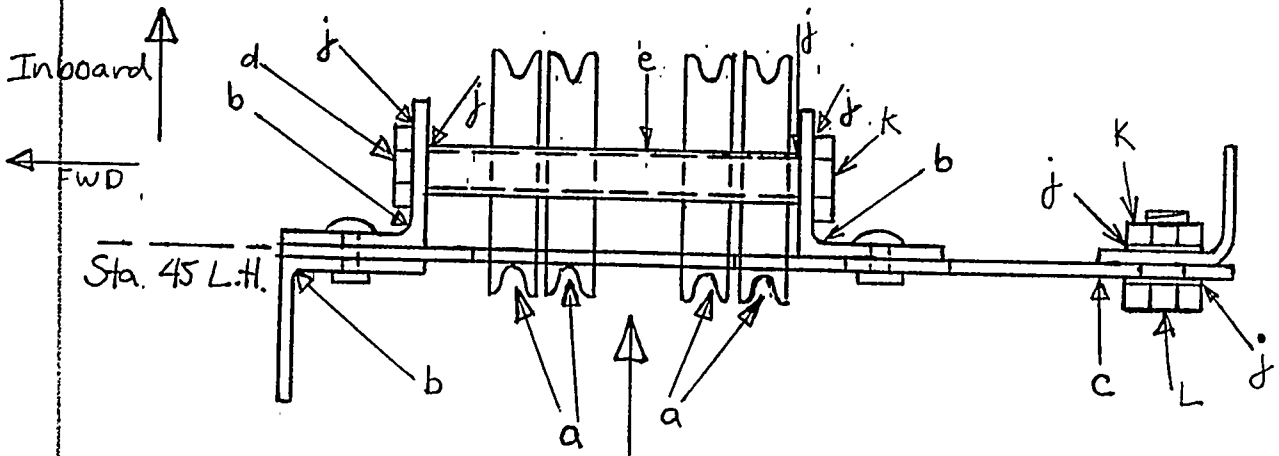

Drawn to actual size

View as seen in diagram below

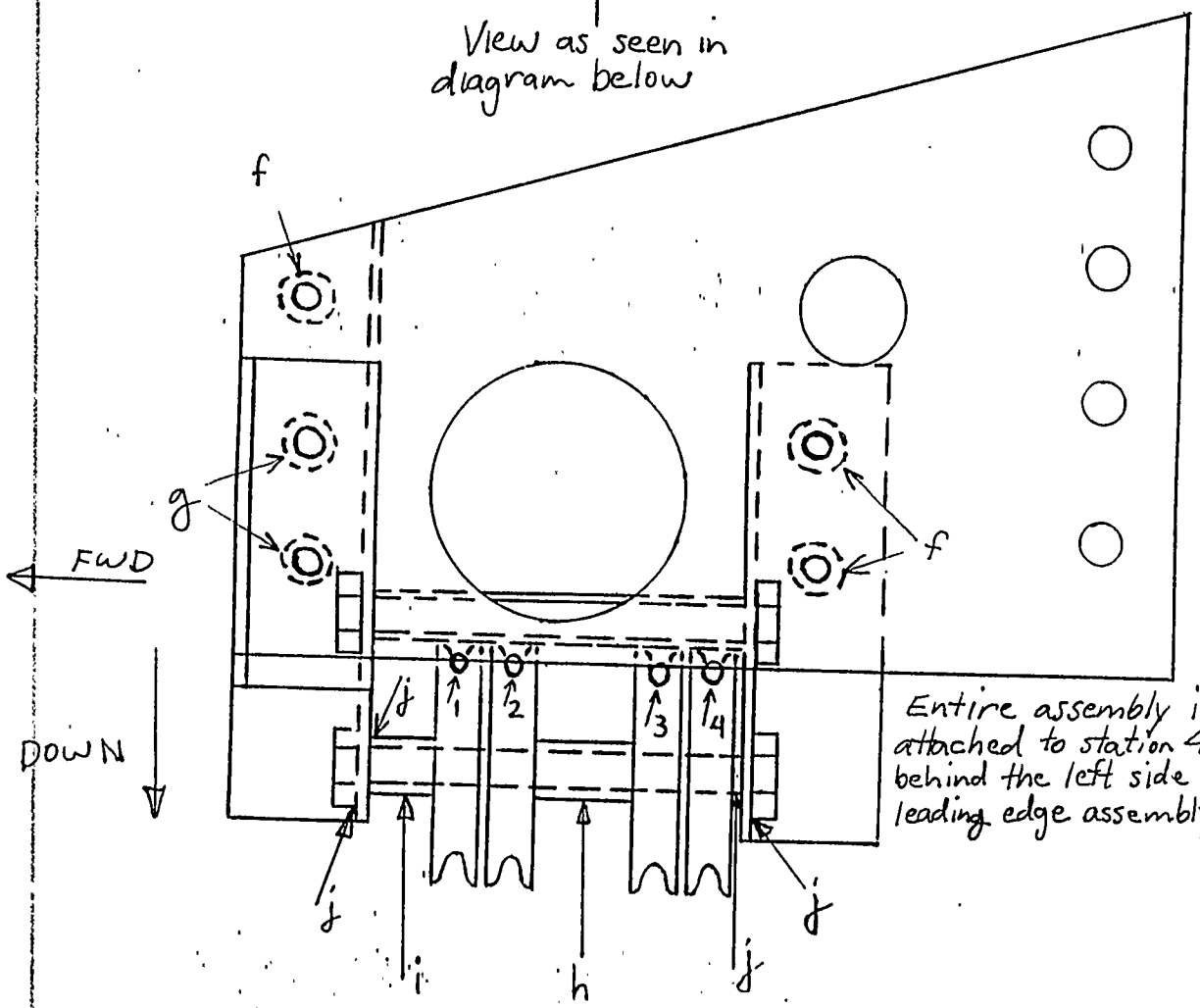

Entire assembly is attached to station 48L, behind the left side leading edge assembly.

	Number of Parts	Description
a	4	AN-210-1A Pulleys.
b	3	1/4" x 1/4" x .065 L-shaped T-6 Extruded Aluminum.
c	1	.060 Sheet Aluminum T-6
d	2	AN3-24A Bolt
e	1	Stainless steel spacer. I.D = .160" Length 1 29/32"
f	3	AN470-AD 5-4 Rivets
g	2	AN470-AD 5-5 Rivets
h	1	Stainless steel spacer ID = .160" Length 7/16"
i	1	Stainless steel spacer ID = .160 Length 17/64"
j	16	Washers AN960-10L
k	6	MS20365-1032A Lock Nut
1		Throttle control cable
2		Mixture control cable
3		mixture control cable
4		throttle control cable
L	4	AN3-3A Bolt

US Department of Transportation
Federal Aviation Administration

MAJOR REPAIR AND ALTERATION
(Airframe, Powerplant, Propeller, or Appliance)

Form Approved
OMB No. 2120-0020

For FAA Use Only

Office Identification
SW159900211

INSTRUCTIONS: Print or type all entries. See FAR 43.9, FAR 43 Appendix B, and AC 43.9-1 (or subsequent revision thereof) for instructions and disposition of this form. This report is required by law (49 U.S.C. 1421). Failure to report can result in a civil penalty not to exceed $1,000 for each such violation (Section 901 Federal Aviation Act of 1958).

1. Aircraft	Make: Grumman	Model: G-73
	Serial No.: J-13	Nationality and Registration Mark: NC2950
2. Owner	Name *(As shown on registration certificate)*: Steve Hamilton	Address *(As shown on registration certificate)*: 4970 Energy Way, Reno, NV 89502

3. For FAA Use Only

The (data/alteration) identified herein complied with applicable airworthiness requirements and is approved for the above described aircraft subject to conformity inspection by a person authorized in section 43.7 of the FAR.

10/01/98 [signature]
Date FAA Inspector SW-OKC-FSDO

4. Unit Identification / **5. Type**

Unit	Make	Model	Serial No.	Repair	Alteration
AIRFRAME	(As described in Item 1 above)				X
POWERPLANT					
PROPELLER					
APPLIANCE	Type				
	Manufacturer				

6. Conformity Statement

A. Agency's Name and Address	B. Kind of Agency	C. Certificate No.
Jeff Molina 1011 N. 2nd Pl. Jenks, OK 74037	X U.S. Certificated Mechanic Foreign Certificated Mechanic Certificated Repair Station Manufacturer	441768867 A&P

D. I certify that the repair and/or alteration made to the unit(s) identified in item 4 above and described on the reverse or attachments hereto have been made in accordance with the requirements of Part 43 of the U.S. Federal Aviation Regulations and that the information furnished herein is true and correct to the best of my knowledge.

Date: 10/1/98
Signature of Authorized Individual: [signature]

7. Approval for Return To Service

Pursuant to the authority given persons specified below, the ur identified in item 4 was inspected in the manner prescribed by the Administrator of the Federal Aviation Administration and is ☒ APPROVED ☐ REJECTED

BY						
		FAA Flt. Standards Inspector	Manufacturer	X	Inspection Authorization	Other *(Specify)*
		FAA Designee	Repair Station		Person Approved by Transport Canada Airworthiness Group	

Date of Approval or Rejection	Certificate or Designation No.	Signature of Authorized Individual
10/1/98	IA478700181	[signature]

FAA Form 337 (12-88)

NOTICE

Weight and balance or operating limitation changes shall be entered in the appropriate aircraft record. An alteration must be compatible with all previous alterations to assure continued conformity with the applicable airworthiness requirements.

8. Description of Work Accomplished

(If more space is required, attach additional sheets. Identify with aircraft nationality and registration mark and date work completed.)

Two identical altertions are located along the centerline, just beneath the top skin, just 15 inches in front of the center section. The purpose of these alterations is to keep the carburetor heat control cables from wearing into the rib at station 180 on the fuselage.

This alteration consist of two pulleys and their components.

Reference Materials:

1)Attached diagrams

2)Grumman Mallard Amphibian Model G-73, services manual, issue August 1, 1951 fig. 141 sheet 1 to 6., AC43.13-1A &2A, para 97a; 100b; para. 195; 198a,c,d,f. AC65 fig. 2-59 and 2-60. pages 66 and 67

3)Technical Manual-Structural repair instructions, June 1, 1957- Secretary of Air Force See Section IX Appendix I-repair Materials, Appendix II-Typical Repair Illustrations, Appendix III-Grumman Standard Practice.

☒ Additional Sheets Are Attached

☆U.S.G.P.O. 1990-761-753

NC2950
9/18/98

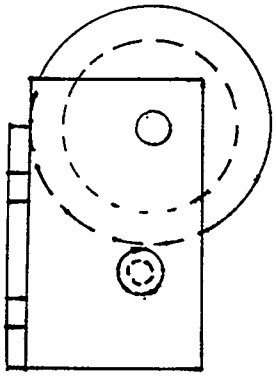

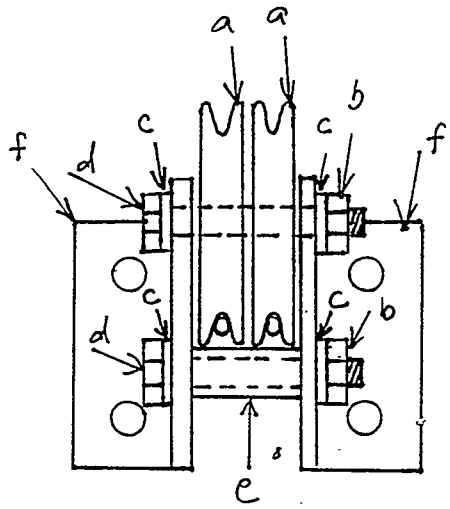

both assemblies are attached to the rib at station 180 on the fuselage.

	Number	Description
a	2	AN-210-1A Pulley
b	2	MS20365-1032A Locknut
c	4	AN-960 washer
d	2	AN3-11A Bolt
e	1	Stainless steel spacer I.D=.160" Lt 9/16"
f	2	Extruded L-Angle 7075-T6 Thick 3/32"

U.S. Department of Transportation
Federal Aviation Administration

MAJOR REPAIR AND ALTERATION
(Airframe, Powerplant, Propeller, or Appliance)

Form Approved
OMB No. 2120-0020

For FAA Use Only

Office Identification
SW159900213

INSTRUCTIONS: Print or type all entries. See FAR 43.9, FAR 43 Appendix B, and AC 43.9-1 (or subsequent revision thereof) for instructions and disposition of this form. This report is required by law (49 U.S.C. 1421). Failure to report can result in a civil penalty not to exceed $1,000 for each such violation (Section 901 Federal Aviation Act of 1958).

1. Aircraft	Make: Grumman	Model: G-73
	Serial No.: J-13	Nationality and Registration Mark: NC2950
2. Owner	Name *(As shown on registration certificate)*: Steve Hamilton	Address *(As shown on registration certificate)*: 4970 Energy Way, Reno, NV 89502

3. For FAA Use Only

The (data/~~[illegible]~~) identified herein complied with applicable airworthiness requirements and is approved for the above described aircraft subject to conformity inspection by a person authorized in section 43.7 of the FAR.

10/01/98 [signature]

Date — FAA Inspector — SW-OKC-FSDO

4. Unit Identification / **5. Type**

Unit	Make	Model	Serial No.	Repair	Alteration
AIRFRAME	(As described in Item 1 above)				X
POWERPLANT					
PROPELLER					
APPLIANCE	Type				
	Manufacturer				

6. Conformity Statement

A. Agency's Name and Address	B. Kind of Agency	C. Certificate No.
Matthew C. Schober 510 W. 12th Okmulgee, OK 74447	X U.S. Certificated Mechanic Foreign Certificated Mechanic Certificated Repair Station Manufacturer	347504224 A&P

D. I certify that the repair and/or alteration made to the unit(s) identified in item 4 above and described on the reverse or attachments hereto have been made in accordance with the requirements of Part 43 of the U.S. Federal Aviation Regulations and that the information furnished herein is true and correct to the best of my knowledge.

Date: 10/1/98 — Signature of Authorized Individual: [signature]

7. Approval for Return To Service

Pursuant to the authority given persons specified below, the unit identified in item 4 was inspected in the manner prescribed by the Administrator of the Federal Aviation Administration and is ☒ APPROVED ☐ REJECTED

BY						
		FAA Flt. Standards Inspector		Manufacturer	X	Inspection Authorization
		FAA Designee		Repair Station		Person Approved by Transport Canada Airworthiness Group

Other *(Specify)*

Date of Approval or Rejection	Certificate or Designation No.	Signature of Authorized Individual
10/1/98	IA478700181	[signature]

FAA Form 337 (12-88)

NOTICE

Weight and balance or operating limitation changes shall be entered in the appropriate aircraft record. An alteration must be compatible with all previous alterations to assure continued conformity with the applicable airworthiness requirements.

8. Description of Work Accomplished

(If more space is required, attach additional sheets. Identify with aircraft nationality and registration mark and date work completed.)

Squat strut lever was originally installed on the aft lavatory compartment bulkhead at the door. It has been relocated to the cockpit, directly above the copilots seat. A new 3/16", 7X19 cable was made to facilitate the new control location. A system of pulleys has been used to ensure cable placement, and phenolic blocks have been used to protect the cable as it passes through the various airframe sections.

Referance Material:

1)Grumman Mallard service manual model G-73 issue August 1, 1951 pages 218, 219 fig. 130. Note: page 218 note on bottom of page.

2) Ref. AC43.13 1A &2A para. 97, para. 100e

3) Ref. attached diagrams.

☒ Additional Sheets Are Attached

☆U.S.G.P.O. 1990-761-753

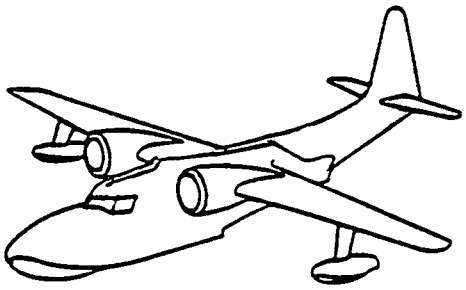

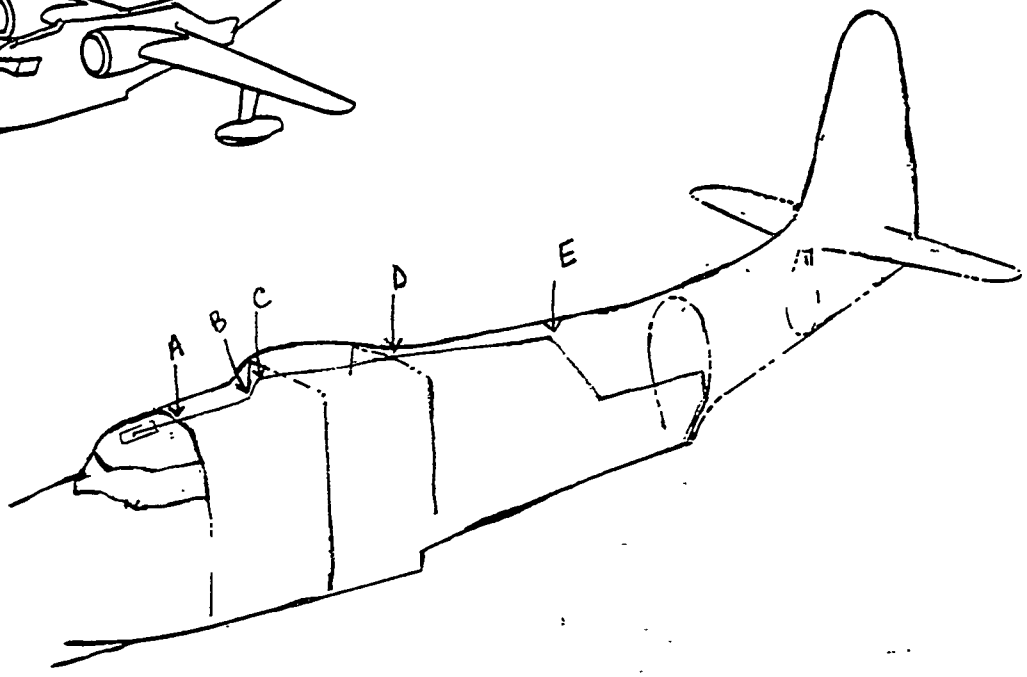

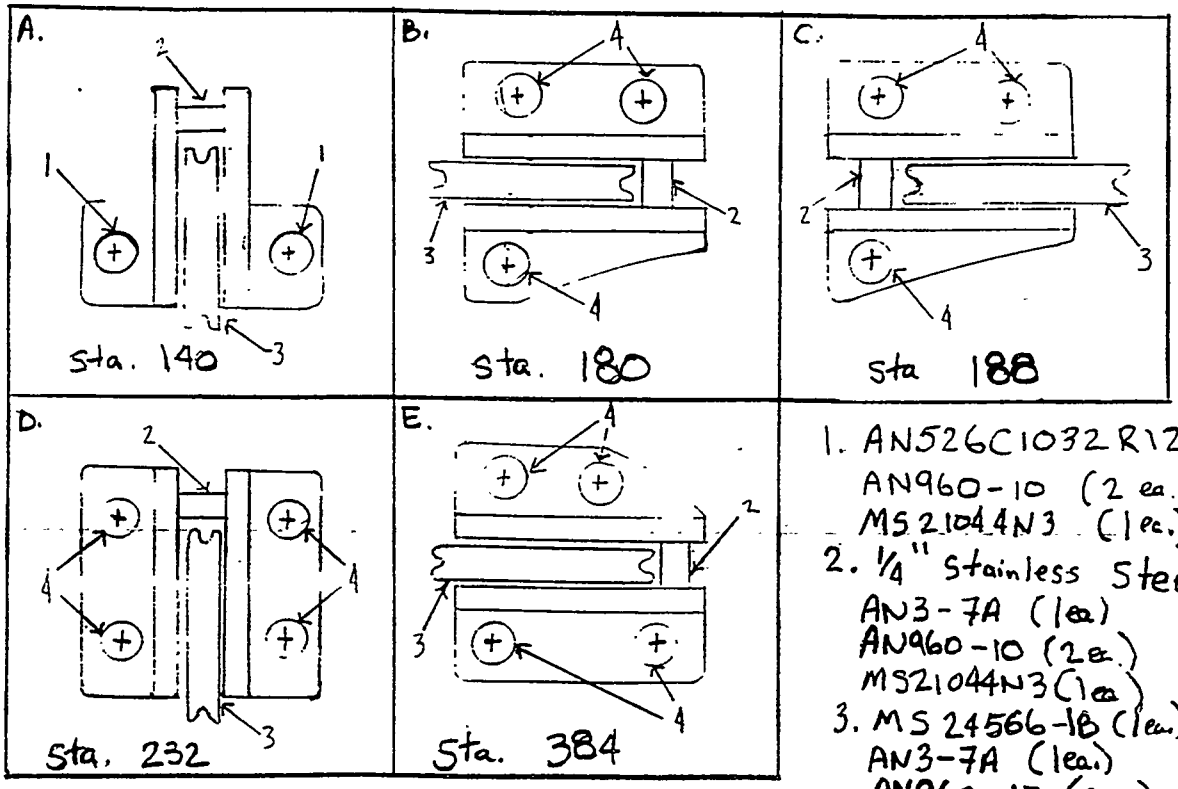

1. AN526C1032R12 (1 ea.)
   AN960-10 (2 ea.)
   MS21044N3 (1 ea.)
2. 1/4" Stainless Steel tubing (I.A.P.)
   AN3-7A (1 ea)
   AN960-10 (2 ea.)
   MS21044N3 (1 ea)
3. MS24566-18 (1 ea.) (I.A.P.)
   AN3-7A (1 ea.)
   AN960-10 (2 ea.)
   MS21044N3 (1 ea)
4. AN526C832R10 (1 ea.)
   AN960-8 (2 ea.)
   MS21044N08 (1 ea.)

Note 1: All cable routing beyond sta. 384 is as originally installed.

Note 2: Cable is protected by phenolic inserts as it passes through each rib.

Note 3: Brackets are 1" x 1" x .10"

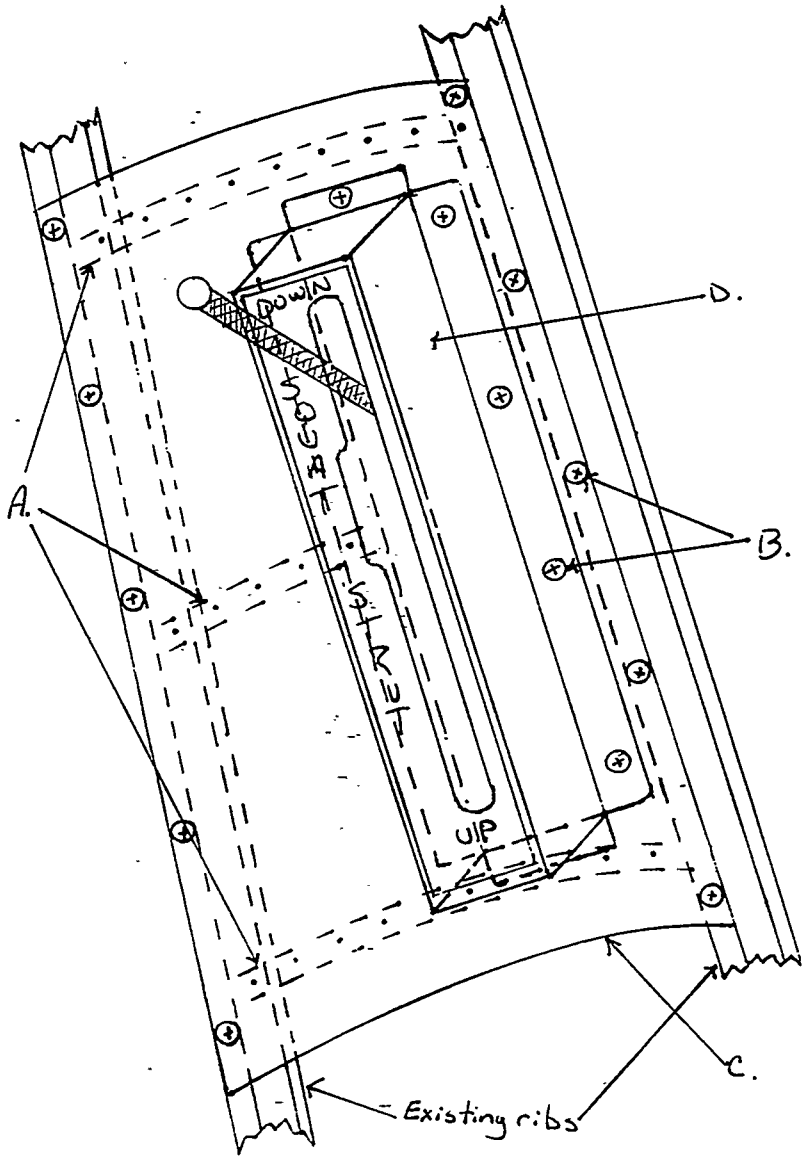

A.	3/4" x 3/4" x .040" thick, angle that is attached every 1" with AN426AD3-4
B.	All screws are: AN526C832R8 and thread into nutplates: MS21059L08
C.	Panel is made from 7075 T-6 .050" thick
D.	Box is made from 2024 T-3 .032" thick and two, ~ of
	1" x 1" x .10" thick angle are riveted inside to support the handle
Scale: 1/4" = 1"	

KEY TO FIGURE 130

ANTI-SQUAT STRUT INSTALLATION

1. Control Lever Assembly—No. 108071.
2. Instruction Plate—No. 108075 Riveted to Bulkhead.
3. Lever Mounting Brackets—No. 108073 (1L-1R) on Aft Side of Bulkhead.
4. Cable Assembly—No. 10802 with Adjusting Turnbuckle.
5. Attachments—Cable Terminal to Lever:
   Bushing—No. 112541-8.
   Bolt—AN23-8.
   Washer—AN960-10.
   Nut—AN320-3.
   Cotter—AN380-C2-2.
6. Cable Support Pulley Bracket Assembly—No. 108072 on Aft Side of Sta. 384 at Stringer No. 5.
   Attachments, Pulley AN210-A to Bracket:
   Bolt—AN3-6A
   Washer—AN960-D10
   Nut—AN365-1032

NOTE

Phenol block cable fairleads No. 57645-9 on Sta. 406, 428 and 446.5 attached with screws AN515-8-10 (2), washers AN960-D10L (2) and nuts AN365-1032 (2), each.

7. Cable Support Pulley Bracket Assembly—No. 108079 on Forward Side of Sta. 464 at Stringer No. 5.
8. Cable Support Pulley Bracket—No. 108078 (2) on Sta. 464 Bulkhead at Stringer No. 8.
9. Cable Guide Tube Assembly—No. 108077 (end plate riveted to rear step fairing floor enclosure box).
10. Guide Tube Support Bracket—No. 108081 at Sta. 446.5.
    Attachments, Guide Tube to Bracket:
    Clamp—AN742-8.
    Screw—AN515-8-8.
    Washer—AN960-D8.
    Nut—AN365-832.

NOTE

Tube supported forward of Sta. 364 and midway between Sta. 364 and 446.5 by NAF1051-32T clamps and led through grommet in hull skin just forward of Sta. 364. These details not shown.

11. Rear Step Fairing Floor Enclosure Box.
12. Cable Fork End Strap Fitting—Tru-loc—No. RA-2500-2.
13. Arm—No. 108076-3.
    Attachments—Cable End Fitting to Arm:
    Bolt—AN23-5.
    Washer—AN960-10 (2).
    Nut—AN320-3.
    Cotter—AN380-C2-2.
14. Attachments, Arm Enclosure Box:
    Bushing—No. [illegible]541-3.
    Spacer—G5-4-50 (2).
    Bolt—AN3-23A.
    Washer—AN960-D10 (2).
    Nut—AN365-1032.
15. Spring—No. G101-268.
16. Arms—No. 108076-2 (1L/1R).
    Attachments to Arm No. 108076-3:
    Bolt—AN24-10.
    Nut—AN320-4.
    Cotter—AN380-C2-2.
17. Arms—No. 108076-1 (2).
    Attachments to Arms No. 108076-2:
    Bushing—No. 112541-2.
    Bolt—AN3-6A.
    Washer—AN960-516 (2).
    Nut—AN365-1032.
18. Attachments, Arms No. 108076-1 to Hull Rear Step Fairing Channels:
    Bushing—No. 112541-1 (2).
    Bolt—AN23-8A (2).
    Nut—AN364-1032 (2).
19. Stop Assemblies (1L/1R) on Hull Rear Step Fairing Channels:
    Spacer—G5-2-8 (2).
    Screw—AN515-6-8 (2).
    Nut—AN365-632 (2).
20. Strut End Fitting Tube—No. 108066-2.
21. Attachments, Arms No. 108076-1 to Strut End Fitting Tube:
    Spacer—No. 112541-1 (2).
    Bolt—AN23-28A.
    Washer—AN960-10 (2).
    Nut—AN364-1032.
22. Strut Tube Assembly—No. 108054 (in up position—down position shown in broken lines).
23. Attachments—Strut to Hull Channels:
    Bushing—No. 112541-7.
    Bushing—No. 112541-3.
    Washer—AN960-516L.
    Bushing—No. 112541-6 (2) (outside washers).
    Bolt—AN3-23A.
    Nut—AN364-1032.
24. Plate—No. 110646-3—Installed on Ceiling over Co-Pilot's Seat. Attachments:
    Screw—AN520-10-7(6)
    Washer—AN960-D10(6)
    Nut—AN365-1032(6).
25. Lever in Locked Position. Dotted Lines Show Unlocked Position, Against Stop Block No. 110645-7.
    Attachments Lever to Plate:
    Bolt—AN23-15
    Washer—AN960-D10(2)
    Washer—AN960-516
    Nut—AN365-1032
    Attachments, Stop Block to Plate:
    Screw—AN526-103L-14(2)
    Washer—AN960-D10(2)
    Nut—AN365-1032(2)
    Attachments, Lever to Cable
    Bolt—AN23-10
    Washer—AN960-D10(3)
    Nut—AN365-1032
26. Cable Assembly to Strut. Made Up of Assemblies Nos. 110643-1, -2, -3.

Note

Items 24, 25 and 26 installed on airplanes J50 and subsequent. They may be installed on earlier airplanes and replace the installation illustrated in items 1 to 8.

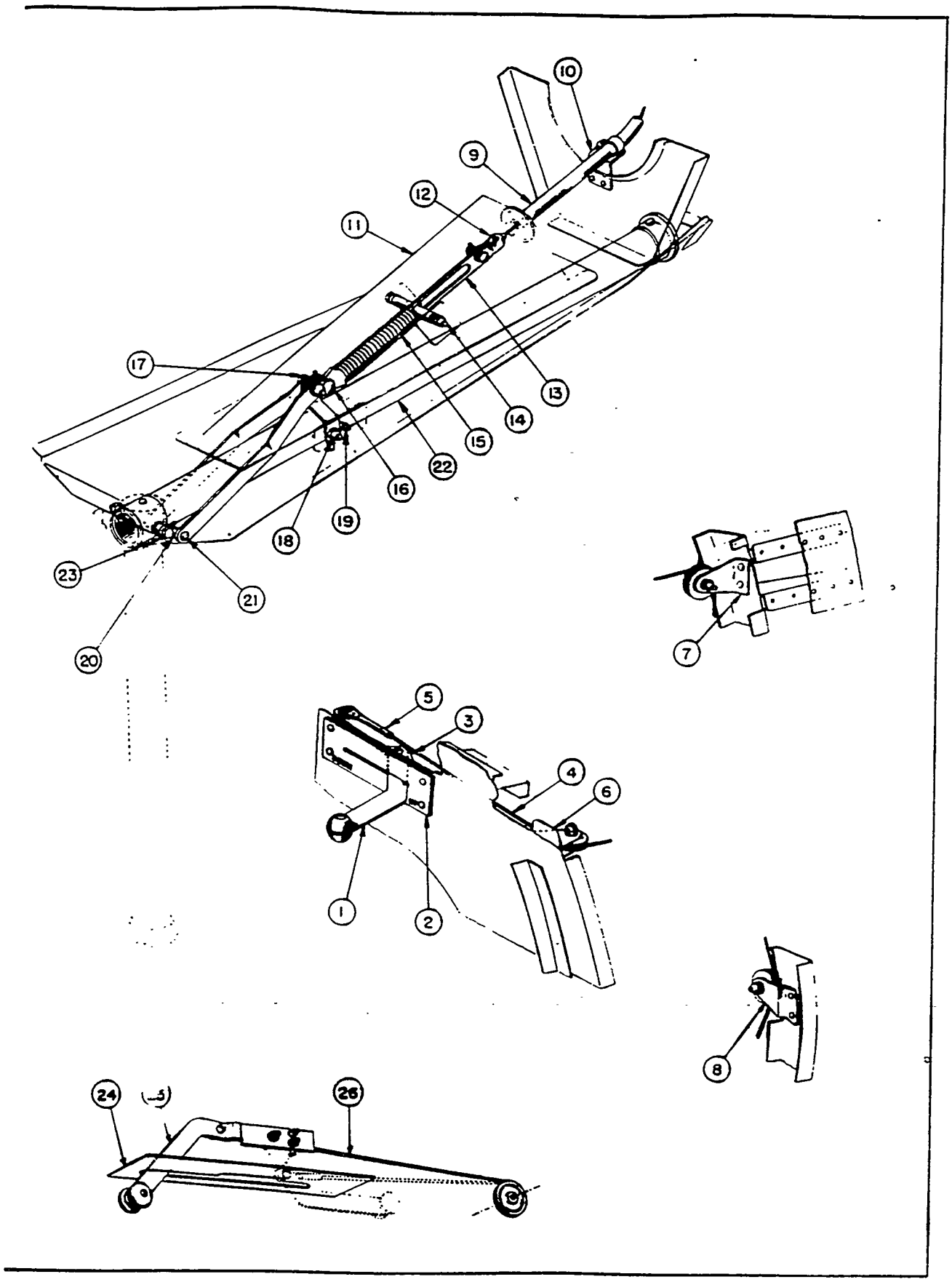

Figure 130—Anti-Squat Strut Installation

US Department of Transportation
Federal Aviation Administration

MAJOR REPAIR AND ALTERATION
(Airframe, Powerplant, Propeller, or Appliance)

Form Approved
OMB No. 2120-0020

For FAA Use Only

Office Identification
SW15990021

INSTRUCTIONS: Print or type all entries. See FAR 43.9, FAR 43 Appendix B, and AC 43.9-1 (or subsequent revision thereof) for instructions and disposition of this form. This report is required by law (49 U.S.C. 1421). Failure to report can result in a civil penalty not to exceed $1,000 for each such violation (Section 901 Federal Aviation Act of 1958).

1. Aircraft	Make: Grumman	Model: G-73
	Serial No.: J-13	Nationality and Registration Mark: NC2950
2. Owner	Name *(As shown on registration certificate)*: Steve Hamilton	Address *(As shown on registration certificate)*: 4970 Energy Way, Reno, NV 89502

3. For FAA Use Only

The (data/[redacted]) identified herein complied with applicable airworthiness requirements and is approved for the above described aircraft subject to conformity inspection by a person authorized in section 43.7 of the FAR.

10/01/98 [signature]

Date FAA Inspector SW-OKC-FSDO

4. Unit Identification / **5. Type**

Unit	Make	Model	Serial No.	Repair	Alteration
AIRFRAME	(As described in Item 1 above)				X
POWERPLANT					
PROPELLER					
APPLIANCE	Type				
	Manufacturer				

6. Conformity Statement

A. Agency's Name and Address	B. Kind of Agency	C. Certificate No.
Jeff Molina 1011 N. 2nd Pl. Jenks, OK 74037	X U.S. Certificated Mechanic Foreign Certificated Mechanic Certificated Repair Station Manufacturer	441768867 A&P

D. I certify that the repair and/or alteration made to the unit(s) identified in item 4 above and described on the reverse or attachments hereto have been made in accordance with the requirements of Part 43 of the U.S. Federal Aviation Regulations and that the information furnished herein is true and correct to the best of my knowledge.

Date	Signature of Authorized Individual
10/1/98	[signature]

7. Approval for Return To Service

Pursuant to the authority given persons specified below, the unit identified in item 4 was inspected in the manner prescribed by the Administrator of the Federal Aviation Administration and is ☒ APPROVED ☐ REJECTED

BY						
		FAA Flt. Standards Inspector		Manufacturer	X	Inspection Authorization	Other *(Specify)*
		FAA Designee		Repair Station		Person Approved by Transport Canada Airworthiness Group	

Date of Approval or Rejection	Certificate or Designation No.	Signature of Authorized Individual
10/1/98	IA478700181	[signature]

FAA Form 337 (12-88)

NOTICE

Weight and balance or operating limitation changes shall be entered in the appropriate aircraft record. An alteration must be compatible with all previous alterations to assure continued conformity with the applicable airworthiness requirements.

8. Description of Work Accomplished

(If more space is required, attach additional sheets. Identify with aircraft nationality and registration mark and date work completed.)

Repaired center section on G-73 S/N J-13, due to corrosion. Replaced wing center section spar caps, webs and skins per F.A.A. Form 8110-3 and Halvorson Engineering drawings and instructions.

Reference Material:

1)Drawing # 9320121-1 Pages 1 to 22.
2)Grumman Mallard Amphibian Model G-73 service manual issue August 1, 1951.
3)Grumman Mallard Amphibian Model G-73 Illustrated Parts catalog.
4)USAF Technical Manual-Structural repair Instructions issue June 1, 1957.

☐ Additional Sheets Are Attached

U.S. DEPARTMENT OF TRANSPORTATION
FEDERAL AVIATION ADMINISTRATION

STATEMENT OF COMPLIANCE WITH THE FEDERAL AVIATION REGULATIONS

DATE: July 15, 1998

AIRCRAFT OR AIRCRAFT COMPONENT IDENTIFICATION

MAKE	MODEL NO.	TYPE (Airplane, Radio, Helicopter, etc.)	NAME OF APPLICANT
Frakes	G-73	Airplane	Abbott Aircraft Services

LIST OF DATA

IDENTIFICATION	TITLE
9320121-1 Rev IR dated 7/14/98	Halvorson Engineering Drawing, G-73 Wing Center Section Repair
9320121-02 Rev IR dated 7/14/98	Halvorson Engineering Report, Structural Substantiation, Wing Center Section Repair 9320121-1-1 G-73 S/N J-13
END END	END END END END

Notes:

1) Acceptance of DER involvement in this field approval was conveyed by telecon between R. Halvorson and Gail Sober, FSDO Inspector for Abbott Aircraft, on July 15, 1998.
2) This approval indicates the data listed above demonstrates compliance only with the regulations specified by paragraph and subparagraph listed below as "APPLICABLE REQUIREMENTS". (Compliance to additional regulations not listed here may be required.) This form does not necessarily constitute FAA approval of all the engineering design data necessary for substantiation to necessary requirements for the entire alteration.
3) These data cover installation provisions only, and are issued in support of a major modification of the subject aircraft.
4) Structural aspects approved only - no approval of systems and equipment or propulsion data.
5) End of data.

PURPOSE OF DATA

In support of a field approval of a major repair: G-73 S/N J-13 Only

APPLICABLE REQUIREMENTS (List specific sections)

Aircraft certificated to CAR 4a.
For this repair: CAR 4b.200, 4b.201, 4b.300, 4b.301, 4b.302, 4b.304, 4b.306

CERTIFICATION - Under authority vested by direction of the Administrator and in accordance with conditions and limitations of appointment under Part 183 of the Federal Aviation Regulations, data listed above and on attached sheets numbered _____ have been examined in accordance with established procedures and found to comply with applicable requirements of the Federal Aviation Regulations.

I (~~We~~) Therefore

☐ Recommend approval of these data

☒ Approve these data

SIGNATURE(S) OF DESIGNATED ENGINEERING REPRESENTATIVE(S)	DESIGNATION NUMBER(S)	CLASSIFICATION(S)
Robert M. Halvorson	NM-2175	Structures

US Department of Transportation
Federal Aviation Administration

MAJOR REPAIR AND ALTERATION
(Airframe, Powerplant, Propeller, or Appliance)

Form Approved
OMB No. 2120-0020

For FAA Use Only

Office Identification
SW159900207

INSTRUCTIONS: Print or type all entries. See FAR 43.9, FAR 43 Appendix B, and AC 43.9-1 (or subsequent revision thereof) for instructions and disposition of this form. This report is required by law (49 U.S.C. 1421). Failure to report can result in a civil penalty not to exceed $1,000 for each such violation (Section 901 Federal Aviation Act of 1958).

1. Aircraft	Make: Grumman	Model: G-73
	Serial No.: J-13	Nationality and Registration Mark: NC2950
2. Owner	Name *(As shown on registration certificate)*: Steve Hamilton	Address *(As shown on registration certificate)*: 4970 Energy Way, Reno, NV 89502

3. For FAA Use Only

The (data/~~alteration~~) identified herein complied with applicable airworthiness requirements and is approved for the above described aircraft subject to conformity inspection by a person authorized in section 43.7 of the FAR.

10/01/98 [signature] SW-OKC-FSDO

Date — FAA Inspector

4. Unit Identification / **5. Type**

Unit	Make	Model	Serial No.	Repair	Alteration
AIRFRAME	*(As described in Item 1 above)*				X
POWERPLANT					
PROPELLER					
APPLIANCE	Type				
	Manufacturer				

6. Conformity Statement

A. Agency's Name and Address	B. Kind of Agency	C. Certificate No.
Matthew C. Schober 510 W. 12th Okmulgee, OK 74447	X U.S. Certificated Mechanic Foreign Certificated Mechanic Certificated Repair Station Manufacturer	347504224 A&P

D. I certify that the repair and/or alteration made to the unit(s) identified in item 4 above and described on the reverse or attachments hereto have been made in accordance with the requirements of Part 43 of the U.S. Federal Aviation Regulations and that the information furnished herein is true and correct to the best of my knowledge.

Date: 10/1/98

Signature of Authorized Individual: [signature]

7. Approval for Return To Service

Pursuant to the authority given persons specified below, the unit identified in item 4 was inspected in the manner prescribed by the Administrator of the Federal Aviation Administration and is ☒ APPROVED ☐ REJECTED

BY							
		FAA Flt. Standards Inspector		Manufacturer	X	Inspection Authorization	Other *(Specify)*
		FAA Designee		Repair Station		Person Approved by Transport Canada Airworthiness Group	

Date of Approval or Rejection	Certificate or Designation No.	Signature of Authorized Individual
10/1/98	IA478200181	[signature]

FAA Form 337 (12 88)

NOTICE

Weight and balance or operating limitation changes shall be entered in the appropriate aircraft record. An alteration must be compatible with all previous alterations to assure continued conformity with the applicable airworthiness requirements.

8. Description of Work Accomplished
(If more space is required, attach additional sheets. Identify with aircraft nationality and registration mark and date work completed.)

Fuselage junction box wiring was returned as closes as possible to the original configuration. The wiring had previously been split into two seperate boxes. The wiring has all-been returned to the original junction box. Grumman wiring diagrams were used to duplicate the original connections; with the exception of the following: The self-resting circuit breakers were replaced with manual reset circuit breakers of identicle amperage and the main circuit 100amp fuses were replaced with 105amp manual reset circuit breakers. The actual original location of components within the junction box is unknown. The components are mounted to facilitate connections and for ease of maintenance.

Reference Material: Electrical book Grumman Mallard S/N J-13 N2442H*
*Note N2442H has been changed to original Registration # NC2950.
Ref. AC43.131A&2A Para. 429.b;c/w/fig.11.1,d(1),(2)
Ref. AC65.15A Fig. 11.7
Ref. Attached drawings

☐ Additional Sheets Are Attached

☆U.S.G.P.O. 1990-761-753

NC2950
9-18-98

Main Circuit Breaker Panel

1	10	2	1	10	10
Turn & Bank	Primers & Starters	-Wheel & Flap pos. -Hobbs Meter -Carb. Air Temp.	Outside air temp.	Landing light Motor Left	L. L. M. Right

5	5	5	10	10	20	5	5	2	2
Post lights	Inst. lights	cockpit lights	cabin lights	Compartment lights	landing lights	position lights	Anti-Collision lights	#1 oil Temp.	#2 oil Temp.

5	5	2	5	5	35	10	10	2	25
#1 engine Fire Warning	#2 engine Fire Warning	Heater Fire Warning	Fire Extinguishers	Heater Control	Heater Blowers	#1 fuel Transfer	#2 Fuel Transfer	Fuel Qty. Indicator	Radio Master

IC 2950
-18 95

Lower Center Panel

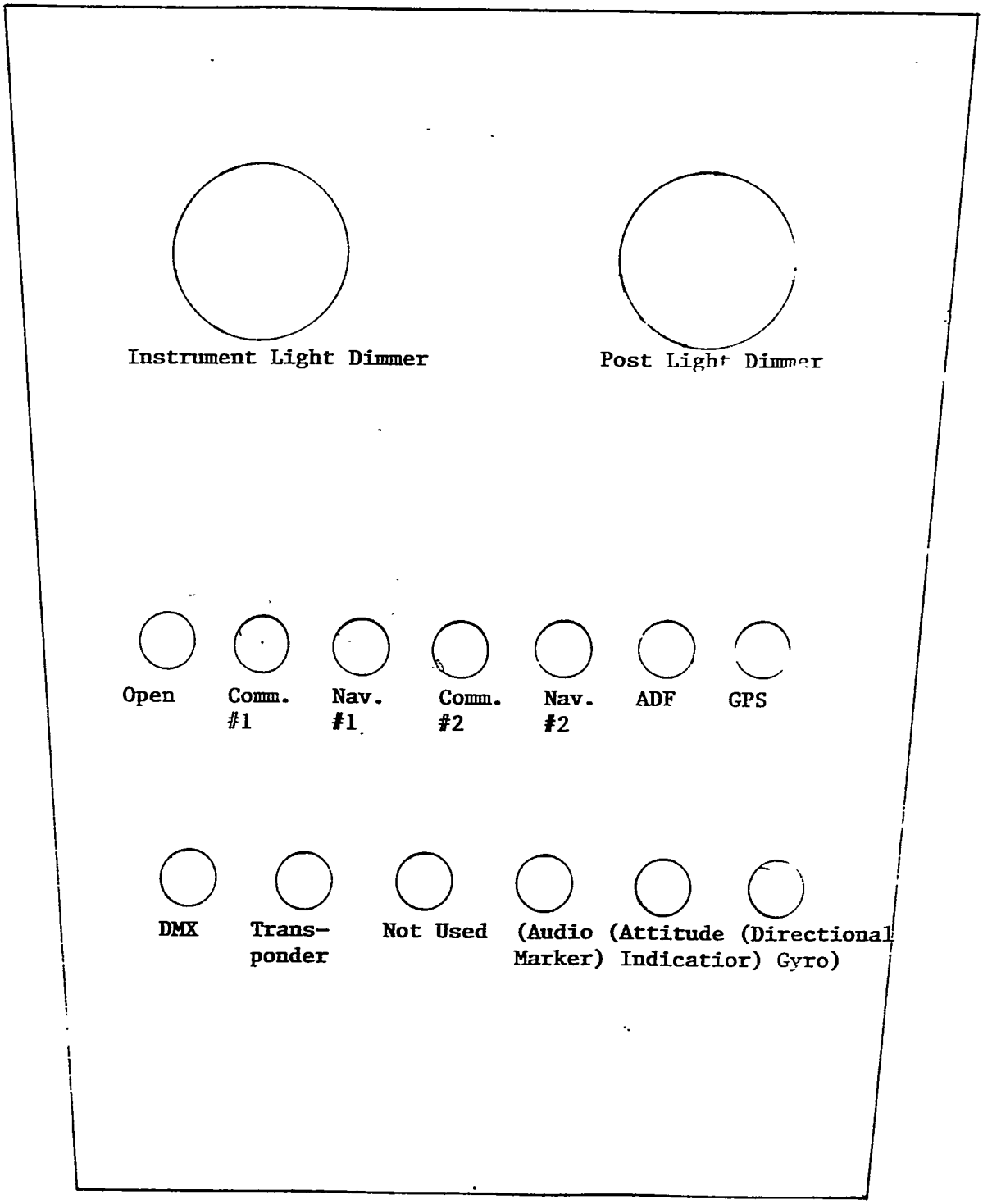

NC 2950
9-18-96

Wiring Diagram

A1 Left landing light close	B1 Left engine gen. switch	C1 Rotating beacon	D1 Right engine gen. switch	E1 Right landing light close
A2 Left landing light open	B2 Fire exting. system	C2 Cabin lights	D2	E2 Right landing light open
A3	B3 Frie exting. system	C3	D3	E3
A4 Left feather pump relay	B4 Fire exting. system	C4 Cabin heat	D4	E4 Right feather pump relay
A5 Left fuel pump	B5 Fire exting. bottle	C5 Cabin heat rheostat	D5	E5 Right engine fuel pump
A6 Left engine starter relay	B6 Fire exting. bottle	C6 Cabin heat	D6	E6 Right engine starter relay
A7 Left engine primer	B7 Cabin heater rheostat	C7 Cabin heat	D7	E7 Right engine primer
A8 Left engine primer	B8 Cabin heat	C8 Cabin heat	D8 Right voltage regulator	E8
A9 Flap position indicator	B9 Flap position indicator	C9 Cabin heat	D9 Right voltage regulator	E9 Battery HOT
A10	B10 Left engine prop. govenor	C10 Cabin heater circuit breaker	D10	E10 Right reverse current relay
A11	B11 Outside air temp.	C11 Cabin heater fire warning	D11	E11
A12 Left engine carb. temp.	B12 Low voltage regulator	C12	D12	E12 Right engine carb. temp.
A13 Left engine oil temp.	B13 Voltammeter Cir. Bk. #2	C13 Cabin heat	D13 Anchor lights	E13 Right engine oil temp.
A14 Left engine tachometer	B14 Voltammeter Cir. Bk. #1	C14 Cabin heat	D14 Right engine prop. gov.	E14 Right engine tachometer
A15 Left engine tachometer	B15	C15 Cabin heater fuel solinoids	D15 Voltammeter cir. bk. #4	E15 Right engine tachometer
A16	B16 Left Voltage Meter	C16 Cabin heat	D16 voltammeter cir. bk. #3	E16 Position lights
A17	B17 Left Gear lock indicator	C17 Ground bus	D17 Right gear lock indicator	E17
A18 Entry light	B18 Left gear lock indicator	C18 Ground bus	D18 Right gear lock indicator	E18 Right Reverse current relay
A19 Pilot heat	B19	C19 Ground bus	D19	E19 Right voltage regulator
A20	B20 Left fuel pump	C20 Ground bus	D20	E20
A21 Left landing light on/off	B21 Right fuel pump	C21 Ground bus	D21	E21 Right landing light on/off
	B22 Left reverse current relay	C22 Ground bus	D22 Right reverse current relay	
	B23 Left reverse current relay	C23 Ground bus	D23 Right reverse current relay	
		C24 Ground bus		

NC 2950
9-18-98

Left Engine Harness

Firewall Connector (AN3106B36-19S)	Junction Box Terminal Strip	Nacelle Terminal Strip	Description
A	Main Bus		(starter relay power)
B		1	(spare)
C		4&5	(ground bus)
D	A6		(starter relay control)
E	Reverse current relay		(generator output)
F	A16		(top rt. T.S. 3)
G	B16	13	(generator regulator)
H	A15	9	("A" of tach gen. plug)
I	A14	8	("B" of tach gen. plug)
J	A5	2	(fuel pump)
K	A7	10	(primer)
L	B10	3	(prop)
M	A13	7	("A" of oil temp plug)
N	A12	6	("A" of carb. air temp plug)
O		11	(spare)
P	B12	12	(spare)
Q			(top rt. T.S. 5)

NC 2950
9-18-98

Right Engine Harness

Firewall Connector (AN3106B36-19S)	Junction Box Terminal Strip	Nacelle Terminal Strip	Description
A	Main Bus		(starter relay power)
B		1	(spare)
C		4&5	(ground bus)
D	E6		(starter relay control)
E	Reverse current relay		(generator output)
F	D3		(top rt. T.S. 3)
G	D9	13	(generator regulator)
H	E14	9	("A" of tach gen. plug)
I	E15	8	("B" of tach gen. plug)
J	E5	2	(fuel pump)
K	E7	10	(primer)
L	D14	3	(prop)
M	E13	7	("A" of oil temp plug)
N	E12	6	("A" of carb. air temp plug)
O		11	(spare)
P	E19	12	(spare)
Q			(top rt. T.S. 5)

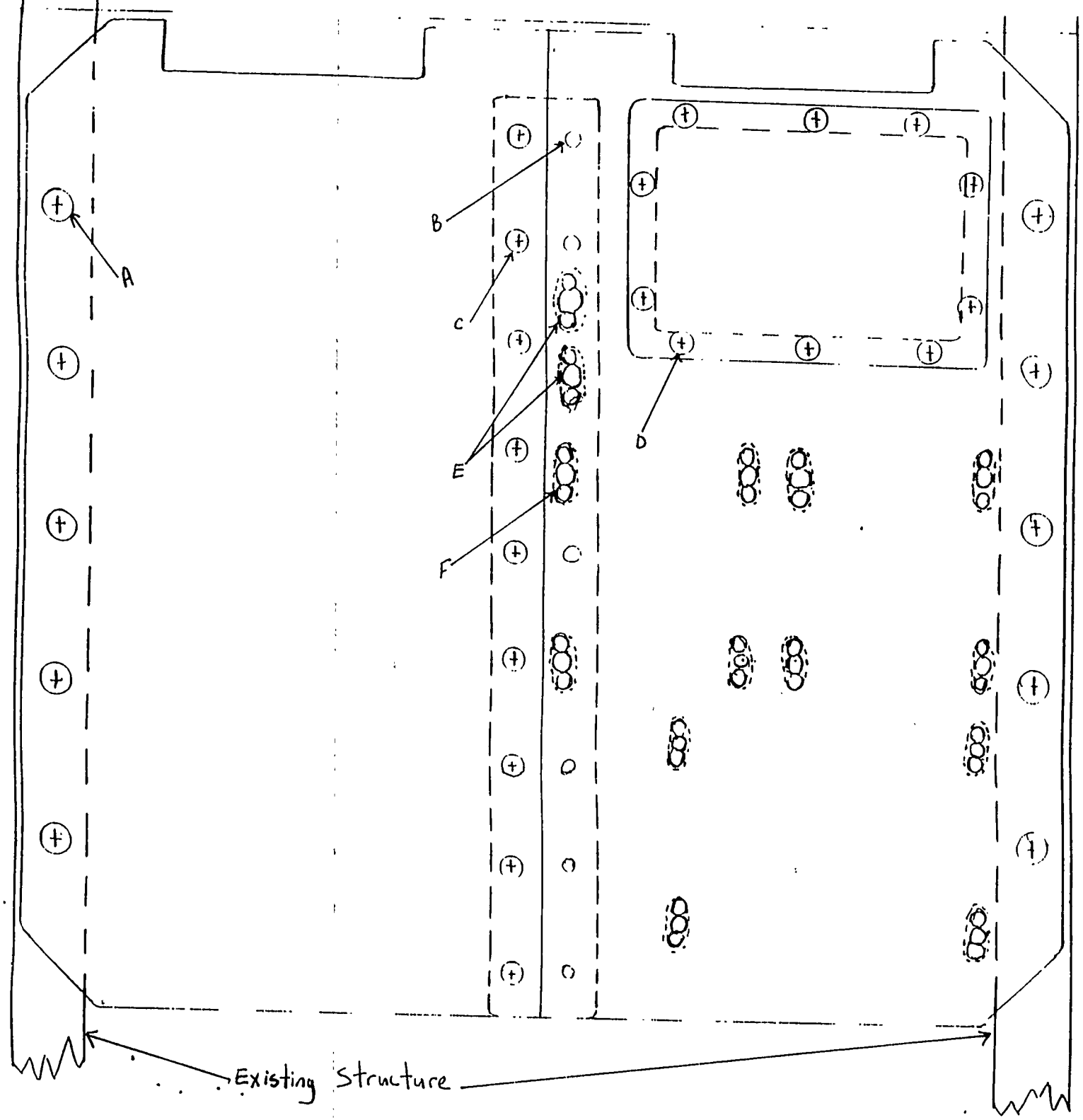

NC 2950
9-18-98

	Item	Qty.
A	AN526C832R10	10
B	MS20426AD4-6	6
C	AN507C832R10	9
D	AN507C832R8	10
E	MS21059L3	2
F	MS21059L08	12

Note 1: Each nutplate is attached with 2 each MS20426AD3-5.

Note 2: Plates and splice are made of 7075T-6 .125" thick.

Scale: 3/8" = 1"

NC 2950
4-18-98

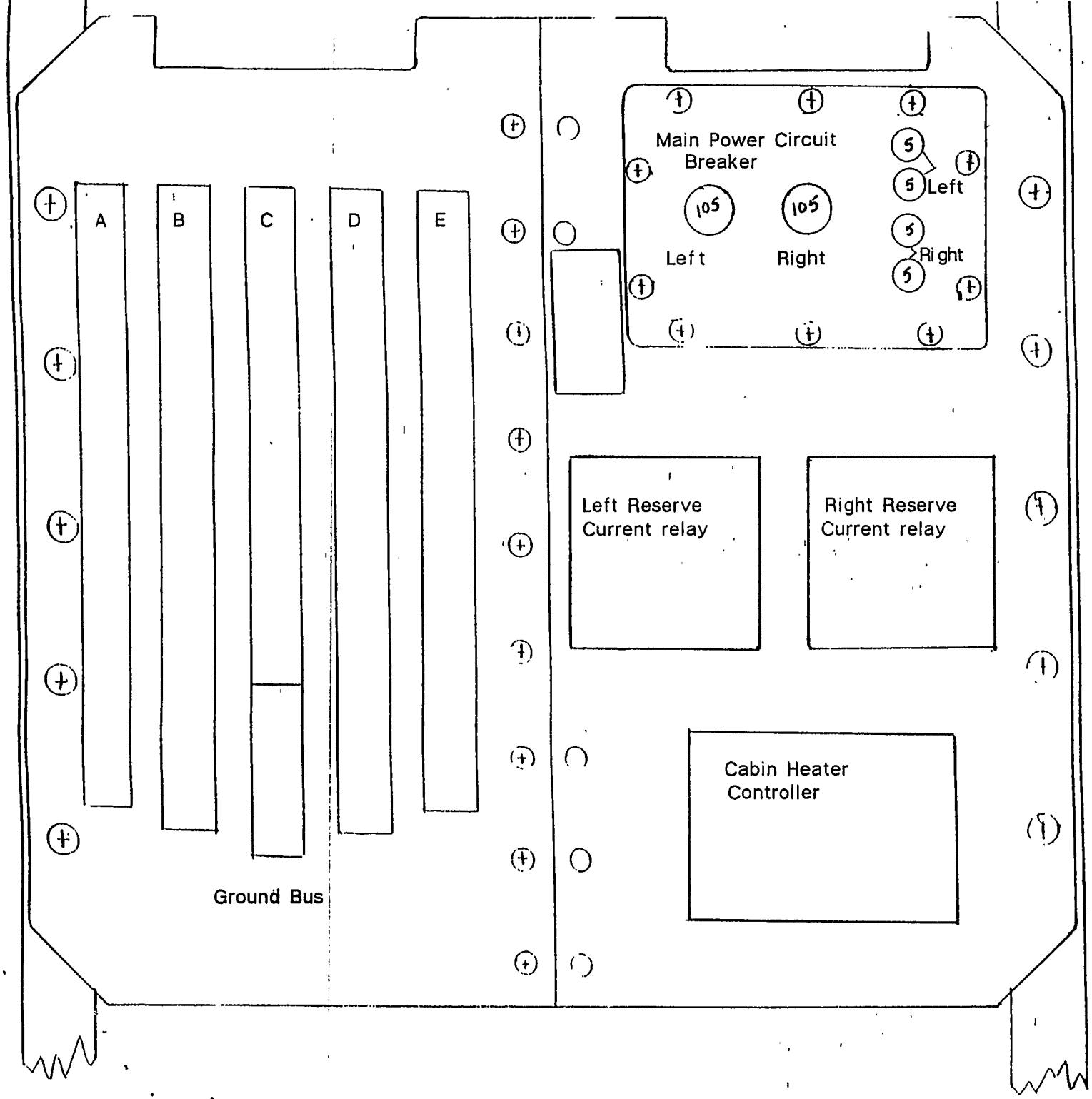

Note 1: Two shunts are mounted on the floor of the junction box.

Note 2: Cabin Heat. relay board is mounted on the left side of the junction box.

US Department of Transportation
Federal Aviation Administration

MAJOR REPAIR AND ALTERATION
(Airframe, Powerplant, Propeller, or Appliance)

Form Approved
OMB No. 2120-0020

For FAA Use Only
Office Identification
SW159900208

INSTRUCTIONS: Print or type all entries. See FAR 43.9, FAR 43 Appendix B, and AC 43.9-1 (or subsequent revision thereof) for instructions and disposition of this form. This report is required by law (49 U.S.C. 1421). Failure to report can result in a civil penalty not to exceed $1,000 for each such violation (Section 901 Federal Aviation Act of 1958).

1. Aircraft	Make: Grumman	Model: G-73
	Serial No.: J-13	Nationality and Registration Mark: NC2950
2. Owner	Name (*As shown on registration certificate*): Steve Hamilton	Address (*As shown on registration certificate*): 4970 Energy Way, Reno, NV 89502

3. For FAA Use Only

The (data/alteration) identified herein complied with applicable airworthiness requirements and is approved for the above described aircraft subject to conformity inspection by a person authorized in section 43.7 of the FAR.

10/01/98 [signature] SW-OKC-FSDO
Date FAA Inspector

4. Unit Identification / **5. Type**

Unit	Make	Model	Serial No.	Repair	Alteration
AIRFRAME	(As described in Item 1 above)				X
POWERPLANT					
PROPELLER					
APPLIANCE	Type				
	Manufacturer				

6. Conformity Statement

A. Agency's Name and Address	B. Kind of Agency	C. Certificate No.
Jeff Molina 1011 N. 2nd Pl. Jenks, OK 74037	X U.S. Certificated Mechanic Foreign Certificated Mechanic Certificated Repair Station Manufacturer	441768867 A&P

D. I certify that the repair and/or alteration made to the unit(s) identified in item 4 above and described on the reverse or attachments hereto have been made in accordance with the requirements of Part 43 of the U.S. Federal Aviation Regulations and that the information furnished herein is true and correct to the best of my knowledge.

Date: 10/1/98
Signature of Authorized Individual: [signature]

7. Approval for Return To Service

Pursuant to the authority given persons specified below, the unit identified in item 4 was inspected in the manner prescribed by the Administrator of the Federal Aviation Administration and is ☒ APPROVED ☐ REJECTED

BY						
	FAA Flt. Standards Inspector	Manufacturer	X	Inspection Authorization	Other (*Specify*)	
	FAA Designee	Repair Station		Person Approved by Transport Canada Airworthiness Group		

Date of Approval or Rejection	Certificate or Designation No.	Signature of Authorized Individual
10/1/98	IA 478700181	[signature]

FAA Form 337 (12 88)

NOTICE

Weight and balance or operating limitation changes shall be entered in the appropriate aircraft record. An alteration must be compatible with all previous alterations to assure continued conformity with the applicable airworthiness requirements.

8. Description of Work Accomplished

(If more space is required, attach additional sheets. Identify with aircraft nationality and registration mark and date work completed.)

The alteration is located behind the leading edge of the left wing, between the left engine and fuselage (station 55 L.H.). This alteration consists basically of three pulleys, the primary purpose of this alteration was to keep one of the carburetor heat control cables from rubbing against the oil drain valve. Another purpose for this alteration was to keep the prop control cables spaced apart from each other.

Reference Materials:

1)Attached Diagrams.

2)Grumman Mallard Amphibian Model G-73, service manual, issue August 1, 1951 fig. 141 sheet 1 to 6, AC43.13-1A & 2A, para. 97a;100b; para. 195; 198a,c,d,f. AC65 fig. 2-59 and 2-60. pages 66 and 67.

3)Technical Manual-Structural repair instructions, June 1, 1957-Secretary [illegible] Air Force, See Section IX, Appendix I-repair materials, Appendix II-Typical Repair Illustrations, Appendix III-Grummman Standard Practice.

☒ Additional Sheets Are Attached

☆U.S.G.P.O. 1990-761-753

NC2950
9/18/98

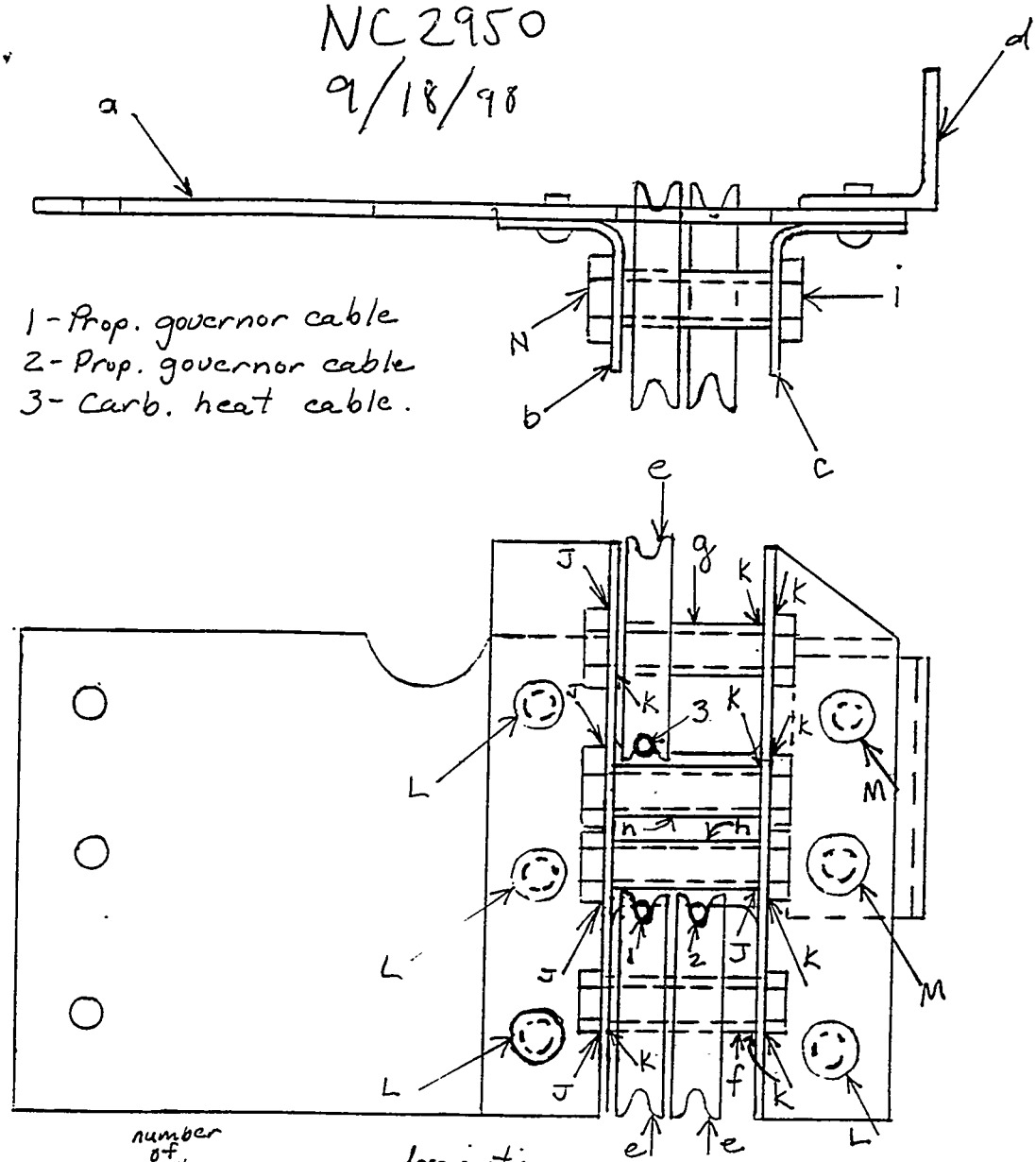

1 - Prop. governor cable
2 - Prop. governor cable
3 - Carb. heat cable.

	number of parts	description
a	1	.060 sheet aluminum T-6 (7075) 11/16" × 7/8" Lgth 3 3/16"
b	1	.050 bent sheet aluminum T-6 (7075) 11/16" × 7/8" Lgth 3 3/16"
c	1	.050 bent sheet aluminum T-6 (7075)
d	1	1/4" × 1/4" × .065 L-shaped extruded Length = 1 7/16"
e	3	AN-210-1A Pulleys
f	1	Stainless Steel spacer I.D. = .160" Length = 5/32"
g	1	Stainless steel spacer I.D. = .160" Length = 15/32"
h	2	Stainless steel spacer I.D. = .160" Length = 25/32"
i	4	AN3-12A Bolt
J	5	AN960 Washers
k	9	AN960-L Washers
L	4	AN 470-AD 5-4 Rivets
M	2	AN 470-AD 5-5 Rivets
N	4	MS20365-1032A Locknut

US Department of Transportation
Federal Aviation Administration

MAJOR REPAIR AND ALTERATION
(Airframe, Powerplant, Propeller, or Appliance)

Form Approved
OMB No. 2120-0020

For FAA Use Only

Office Identification
SW1599002 10

INSTRUCTIONS: Print or type all entries. See FAR 43.9, FAR 43 Appendix B, and AC 43.9-1 (or subsequent revision thereof) for instructions and disposition of this form. This report is required by law (49 U.S.C. 1421). Failure to report can result in a civil penalty not to exceed $1,000 for each such violation (Section 901 Federal Aviation Act of 1958).

1. Aircraft	Make: Grumman	Model: G-73
	Serial No.: J-13	Nationality and Registration Mark: NC2950
2. Owner	Name *(As shown on registration certificate)*: Steve Hamilton	Address *(As shown on registration certificate)*: 4970 Energy Way, Reno, NV 89502

3. For FAA Use Only

The (data/~~[illegible]~~) identified herein complied with applicable airworthiness requirements and is approved for the above described aircraft subject to conformity inspection by a person authorized in section 43.7 of the FAR.

10/1/98 Richard [illegible]

Date | FAA Inspector | SW-OKC-FSDO

4. Unit Identification / **5. Type**

Unit	Make	Model	Serial No.	Repair	Alteration
AIRFRAME	(As described in Item 1 above)				X
POWERPLANT					
PROPELLER					
APPLIANCE	Type				
	Manufacturer				

6. Conformity Statement

A. Agency's Name and Address	B. Kind of Agency	C. Certificate No.
Matthew C. Schober 510 W. 12th Okmulgee, OK 74447	X U.S. Certificated Mechanic Foreign Certificated Mechanic Certificated Repair Station Manufacturer	347504224 A&P

D. I certify that the repair and/or alteration made to the unit(s) identified in item 4 above and described on the reverse or attachments hereto have been made in accordance with the requirements of Part 43 of the U.S. Federal Aviation Regulations and that the information furnished herein is true and correct to the best of my knowledge.

Date	Signature of Authorized Individual
10/1/98	[signature]

7. Approval for Return To Service

Pursuant to the authority given persons specified below, the unit identified in item 4 was inspected in the manner prescribed by the Administrator of the Federal Aviation Administration and is ☒ APPROVED ☐ REJECTED

BY						
		FAA Flt. Standards Inspector		Manufacturer	X	Inspection Authorization	Other *(Specify)*
		FAA Designee		Repair Station		Person Approved by Transport Canada Airworthiness Group	

Date of Approval or Rejection	Certificate or Designation No.	Signature of Authorized Individual
10/1/98	IA478700181	[signature]

FAA Form 337 (12-88)

NOTICE

Weight and balance or operating limitation changes shall be entered in the appropriate aircraft record. An alteration must be compatible with all previous alterations to assure continued conformity with the applicable airworthiness requirements.

8. Description of Work Accomplished

(If more space is required, attach additional sheets. Identify with aircraft nationality and registration mark and date work completed.)

A mounting bracket and two pulleys were added to the right wing forward box beam at station 62. The pulleys prevent the carburetor heat control cables from rubbing on the leading edge forming rib.

Reference Material:

1)Attached Diagrams.

2)Grumman Mallard Amphibian Model G-73, service manual, Issue August 1, 1951 fig. 141 sheet 1to6, AC43.13-1A & 2A, para 97a; 100b; para. 195; 198a,c,d,f. AC65 fig. 2-59 and 2-60. pages 66 and 67.

3)Technical Manual-Structural repair instructions, Jun1, 1957-Secretary of Air Force, See Section IX, Appendix 1-repair materials, Appendix II-Typical Repair Illustrations, Appendix III-Grumman Standard Practice.

☒ Additional Sheets Are Attached

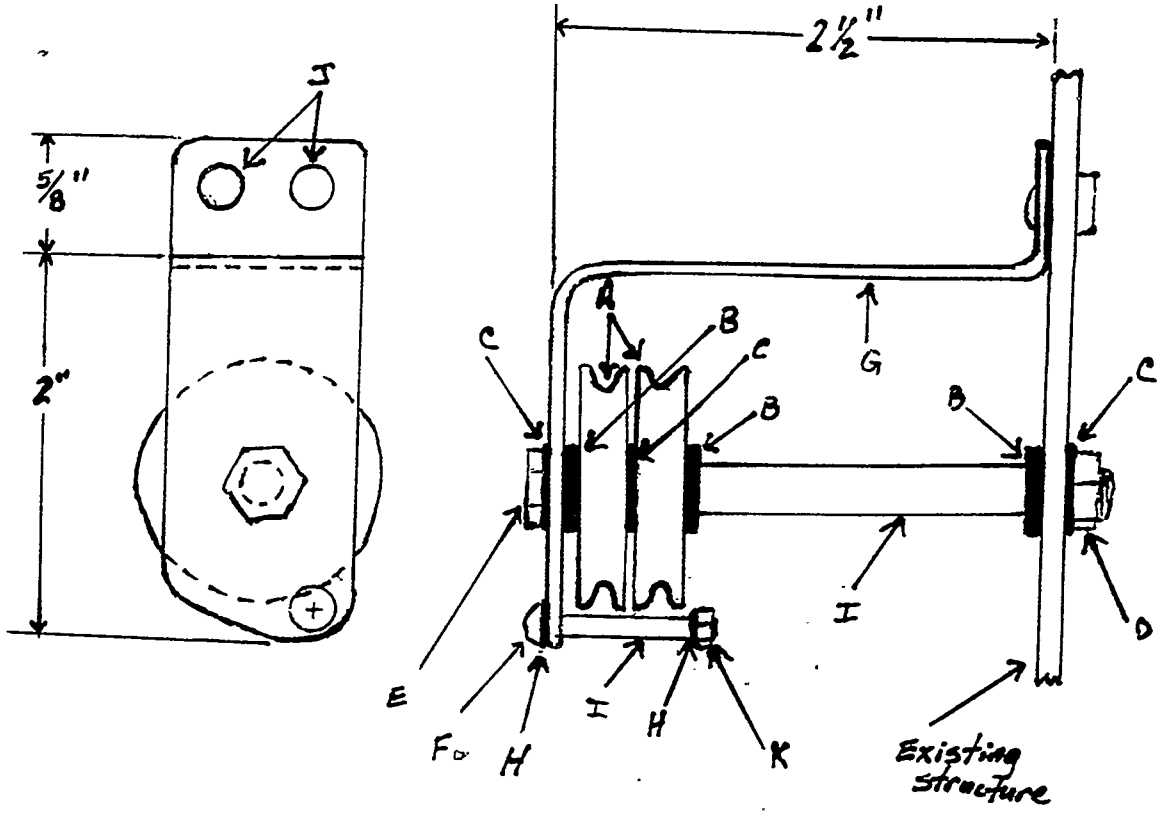

A	MS24566 -1B
B	AN960 -10
C	AN960 -10L
D	MS20365 - 1032A
E	AN3-31A
F	AN526C832R16
G	2024 T-3, .050" thick
H	AN960C8L
I	.250" steel spacer, .032" wall thickness
J	MS20470AD4-4
K	MS20364-832A

NC2950

9/22/98

US Department of Transportation
Federal Aviation Administration

MAJOR REPAIR AND ALTERATION
(Airframe, Powerplant, Propeller, or Appliance)

Form Approved
OMB No. 2120-0020

For FAA Use Only

Office Identification
SW159900209

INSTRUCTIONS: Print or type all entries. See FAR 43.9, FAR 43 Appendix B, and AC 43.9-1 (or subsequent revision thereof) for instructions and disposition of this form. This report is required by law (49 U.S.C. 1421). Failure to report can result in a civil penalty not to exceed $1,000 for each such violation (Section 901 Federal Aviation Act of 1958).

1. Aircraft	Make: Grumman	Model: G-73
	Serial No.: J-13	Nationality and Registration Mark: NC2950
2. Owner	Name *(As shown on registration certificate)*: Steve Hamilton	Address *(As shown on registration certificate)*: 4970 Energy Way, Reno, NV 89502

3. For FAA Use Only

~~The (data/alteration) identified herein complied with applicable~~ airworthiness requirements and is approved for the above described aircraft subject to conformity inspection by a person authorized in section 43.7 of the FAR.

10/01/98 [signature]
Date FAA Inspector SW-OKC-FSDO

4. Unit Identification / **5. Type**

Unit	Make	Model	Serial No.	Repair	Alteration
AIRFRAME	(As described in Item 1 above)				X
POWERPLANT					
PROPELLER					
APPLIANCE	Type / Manufacturer				

6. Conformity Statement

A. Agency's Name and Address	B. Kind of Agency	C. Certificate No.
Matthew C. Schober 510 W. 12th Okmulgee OK 74447	X U.S. Certificated Mechanic Foreign Certificated Mechanic Certificated Repair Station Manufacturer	347504224 A&P

D. I certify that the repair and/or alteration made to the unit(s) identified in item 4 above and described on the reverse or attachments hereto have been made in accordance with the requirements of Part 43 of the U.S. Federal Aviation Regulations and that the information furnished herein is true and correct to the best of my knowledge.

Date: 10/1/98
Signature of Authorized Individual: [signature]

7. Approval for Return To Service

Pursuant to the authority given persons specified below, the unit identified in item 4 was inspected in the manner prescribed by the Administrator of the Federal Aviation Administration and is ☒ APPROVED ☐ REJECTED

BY						
	FAA Flt. Standards Inspector	Manufacturer	X	Inspection Authorization	Other *(Specify)*
	FAA Designee	Repair Station		Person Approved by Transport Canada Airworthiness Group	

Date of Approval or Rejection	Certificate or Designation No.	Signature of Authorized Individual
10/1/98	IA478700181	[signature]

FAA Form 337 (12-88)

NOTICE

Weight and balance or operating limitation changes shall be entered in the appropriate aircraft record. An alteration must be compatible with all previous alterations to assure continued conformity with the applicable airworthiness requirements.

8. Description of Work Accomplished

(If more space is required, attach additional sheets. Identify with aircraft nationality and registration mark and date work completed.)

The carburetor heat controls were moved from the cockpit overhead panel aft approximately sixteen inches. The installation incorporates G-73 carburetor heat controls that were installed on airplanes J-30 and subsequent (item D figure 173). The assembly is mounted on the aircraft centerlind and the cables use existing pulleys and routing.

Reference Materials:

1)Grumman Mallard illustrated parts catalog model G-73 Page 316-319 fig. 173
2)Ac43.13 1A &2A para. 97, para. 100E
3)Grumman Mallard service manual model G-73 September 1947, issue August 1, 1951, J-50 and subsequent pages 218 & 219 fig. 130
4)Attached diagrams.

☒ Additional Sheets Are Attached

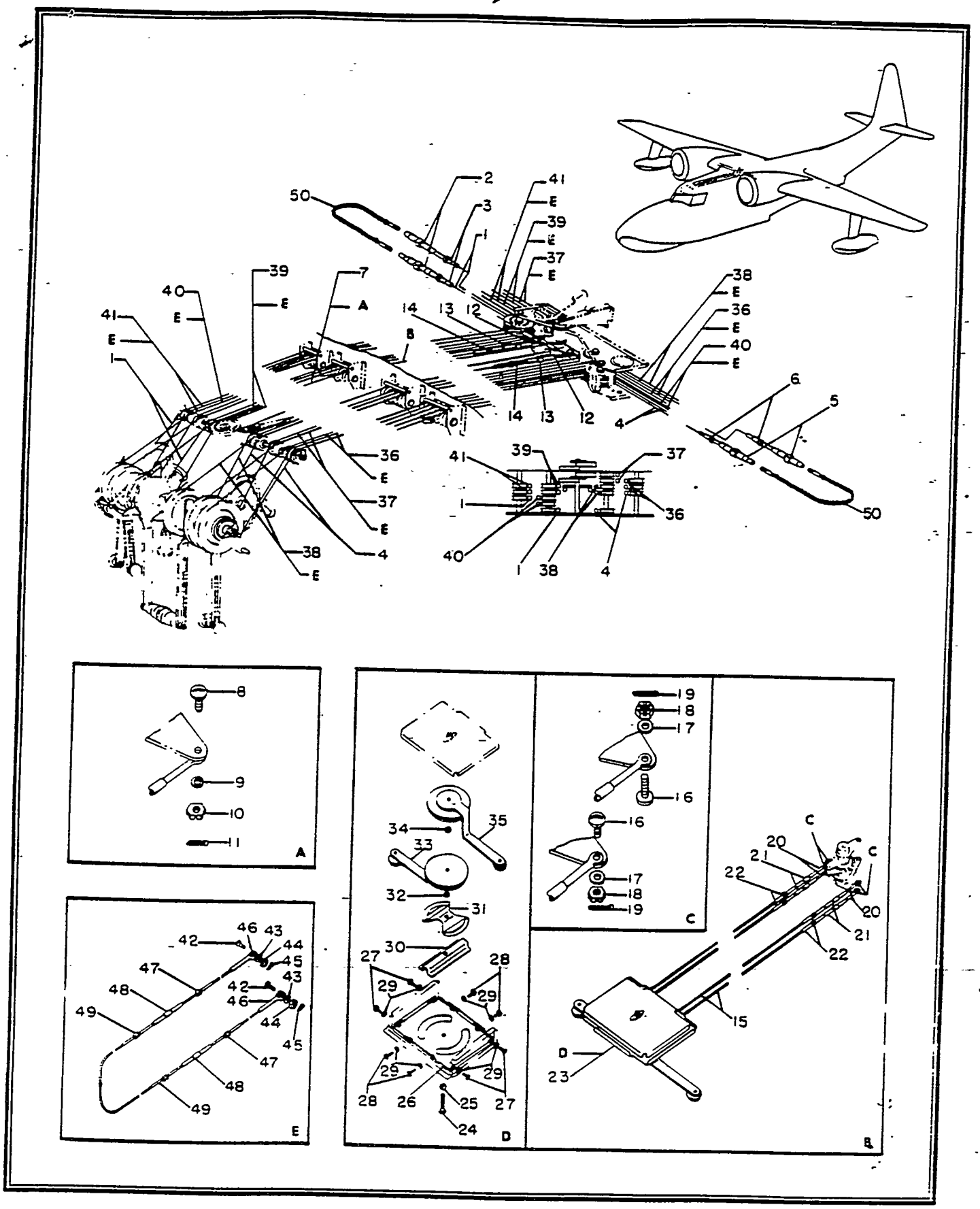

Figure 173—Engine Controls Installation

NC 2950 9/21/98

NC2950
9/21/48

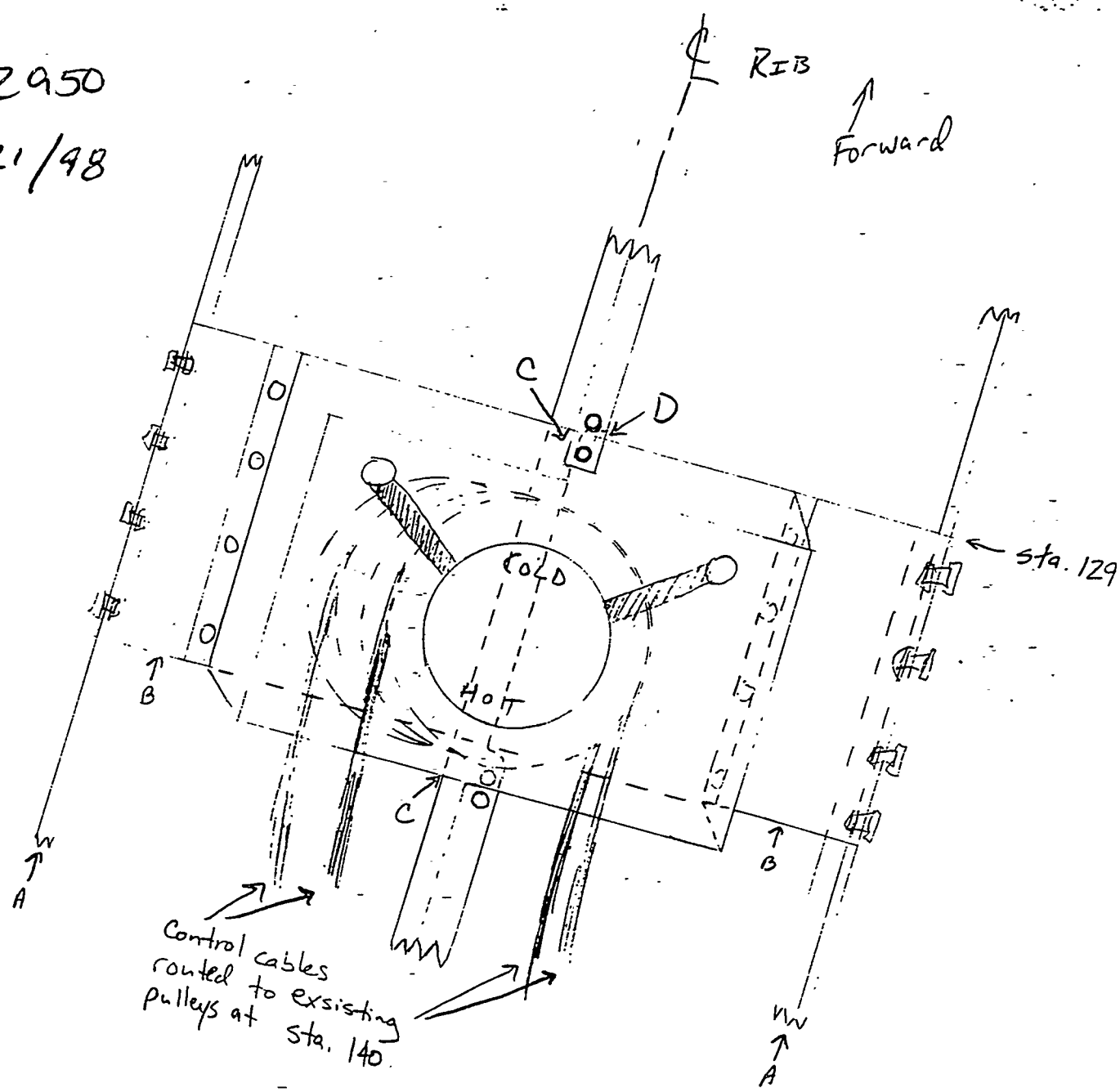

A: 3/4" x 3/4" x .050" Angle that is riveted through the top skin.

B: 2024 T-3, .040" that is bolted to Angle & control box using:
- 8 ea. AN3-4A
- 16 ea. AN960-10
- 8 ea. MS20365-1032A

C. 1" x 1" x .10" Angle that attaches box to rib using:
- 4 ea. AN526C832R10
- 8 ea. AN960-8
- 4 ea. MS20365-832A

D. Portion of rib was removed to facilitate installation of box.

FAA AIRCRAFT REGISTRY
CAMERA NO. 2N DATE: 8/25/93

Form Approved
O.M.B. No. 2120-0018

US Department of Transportation
Federal Aviation Administration

APPLICATION FOR AIRWORTHINESS CERTIFICATE

INSTRUCTIONS — Print or type. Do not write in shaded areas; these are for FAA use only. Submit original only to an authorized FAA Representative. If additional space is required, use an attachment. For special flight permits complete Sections II and VI or VII as applicable

I. AIRCRAFT DESCRIPTION

1. REGISTRATION MARK: N2442H	2. AIRCRAFT BUILDER'S NAME (Make): GRUMMAN	3. AIRCRAFT MODEL DESIGNATION: MALLARD G73	4. YR. MFR: 1-7-47	FAA CODING: 395/802
5. AIRCRAFT SERIAL NO.: J-13	6. ENGINE BUILDER'S NAME (Make): P-W	7. ENGINE MODEL DESIGNATION: 1340		99999
8. NUMBER OF ENGINES: 2	9. PROPELLER BUILDER'S NAME (Make): Hartzell	10. PROPELLER MODEL DESIGNATION	11. AIRCRAFT IS (Check if applicable): IMPORT	

II. CERTIFICATION REQUESTED

APPLICATION IS HEREBY MADE FOR: (Check applicable items)

A	1	X	STANDARD AIRWORTHINESS CERTIFICATE (Indicate category)	NORMAL	UTILITY	ACROBATIC	X TRANSPORT	GLIDER	BALLOON			
B			SPECIAL AIRWORTHINESS CERTIFICATE (Check appropriate items)									
	2		LIMITED									
	5		PROVISIONAL (Indicate class)	1	CLASS I							
				2	CLASS II							
	3		RESTRICTED (Indicate operation(s) to be conducted)	1	AGRICULTURE AND PEST CONTROL	2	AERIAL SURVEYING	3	AERIAL ADVERTISING			
				4	FOREST (Wildlife conservation)	5	PATROLLING	6	WEATHER CONTROL			
				7	CARRIAGE OF CARGO	0	OTHER (Specify)					
	4		EXPERIMENTAL (Indicate operation(s) to be conducted)	1	RESEARCH AND DEVELOPMENT	2	AMATEUR BUILT	3	EXHIBITION			
				4	RACING	5	CREW TRAINING		MKT. SURVEY			
				0	TO SHOW COMPLIANCE WITH FAR							
	6		SPECIAL FLIGHT PERMIT (Indicate operation to be conducted, then complete Section VI or VII as applicable on reverse side)	1	FERRY FLIGHT FOR REPAIRS, ALTERATIONS, MAINTENANCE OR STORAGE							
				2	EVACUATE FROM AREA OF IMPENDING DANGER							
				3	OPERATION IN EXCESS OF MAXIMUM CERTIFICATED TAKE-OFF WEIGHT							
				4	DELIVERING OR EXPORT	5	PRODUCTION FLIGHT TESTING					
				6	CUSTOMER DEMONSTRATION FLIGHTS							
C	6		MULTIPLE AIRWORTHINESS CERTIFICATE (Check ABOVE Restricted Operation and Standard or Limited as applicable)									

III. OWNER'S CERTIFICATION

A. REGISTERED OWNER (As shown on certificate of aircraft registration) — IF DEALER, CHECK HERE →

NAME	ADDRESS
AMPHIBIAN Parts INC	4041 NW 25 St, MIAMI, FL 33142

B. AIRCRAFT CERTIFICATION BASIS (Check applicable blocks and complete items as indicated)

AIRCRAFT SPECIFICATION OR TYPE CERTIFICATE DATA SHEET (Give No. and Revision No.): CAR 4A	AIRWORTHINESS DIRECTIVES (Check if all applicable AD's complied with and give latest AD No.)
AIRCRAFT LISTING (Give page number(s))	SUPPLEMENTAL TYPE CERTIFICATE (List number of each STC incorporated)

C. AIRCRAFT OPERATION AND MAINTENANCE RECORDS

CHECK IF RECORDS IN COMPLIANCE WITH FAR 91.173	TOTAL AIRFRAME HOURS: TT 7124.9	3 EXPERIMENTAL ONLY (Enter hours flown since last certificate issued or renewed)

D. CERTIFICATION — I hereby certify that I am the registered owner (or his agent) of the aircraft described above, that the aircraft is registered with the Federal Aviation Administration in accordance with Section 501 of the Federal Aviation Act of 1958 and applicable Federal Aviation Regulations, and that the aircraft has been inspected and is airworthy and eligible for the airworthiness certificate requested

DATE OF APPLICATION	NAME AND TITLE (Print or type)	SIGNATURE
6-8-92	DRAW FRANKLIN OWNER	Draw H Franklin

IV. INSPECTION AGENCY VERIFICATION

A. THE AIRCRAFT DESCRIBED ABOVE HAS BEEN INSPECTED AND FOUND AIRWORTHY BY (Complete ite... on only if FAR 21.183(d) applies)

2 FAR PART 121 OR 127 CERTIFICATE HOLDER (Give Certificate No.)	3 CERTIFICATED MECHANIC (Give Certificate No.)	6 CERTIFICATED REPAIR STATION (Give Certificate No.)
5 AIRCRAFT MANUFACTURER (Give name of firm)		

DATE	TITLE	SIGNATURE

V. FAA REPRESENTATIVE CERTIFICATION

(Check ALL applicable blocks in items A and B)

A. I find that the aircraft described in Section I or VII meets requirements for: THE CERTIFICATE REQUESTED; 4 AMENDMENT OR MODIFICATION OF CURRENT AIRWORTHINESS CERTIFICATE

B. Inspection for a special flight permit under Section VII was conducted by: FAA INSPECTOR; CERTIFICATE HOLDER UNDER; FAA DESIGNEE; FAR 65; FAR 121, 127 or 135; FAR 145

DATE	DISTRICT OFFICE	4 DESIGNEE'S SIGNATURE AND NO.	1 FAA INSPECTOR'S SIGNATURE

FAA Form 8130-6 (11-88) SUPERSEDES PREVIOUS EDITION

FAA AIRCRAFT REGISTRY
CAMERA NO. 2N DATE: 8/25/93

*U.S.GPO:1990-0-748-012/20061

VII. PRODUCTION FLIGHT TESTING

A. MANUFACTURER

NAME	ADDRESS

B. PRODUCTION BASIS *(Check applicable item)*

- ☐ PRODUCTION CERTIFICATE *(Give production certificate number)*
- ☐ TYPE CERTIFICATE ONLY
- ☐ APPROVED PRODUCTION INSPECTION SYSTEM

C. GIVE QUANTITY OF CERTIFICATES REQUIRED FOR OPERATING FIELDS →

DATE OF APPLICATION	NAME AND TITLE *(Print or type)*	SIGNATURE

VIII. SPECIAL FLIGHT PERMIT PURPOSES OTHER THAN PRODUCTION FLIGHT TEST

A. DESCRIPTION OF AIRCRAFT

REGISTERED OWNER	ADDRESS
BUILDER *(Make)*	MODEL
SERIAL NUMBER	REGISTRATION MARK

B. DESCRIPTION OF FLIGHT — CUSTOMER DEMONSTRATION FLIGHTS ☐ *(Check if applicable)*

FROM	TO	
VIA	DEPARTURE DATE	DURATION

C. CREW REQUIRED TO OPERATE THE AIRCRAFT AND ITS EQUIPMENT

☐ PILOT ☐ CO-PILOT ☐ NAVIGATOR ☐ OTHER *(Specify)*

D. THE AIRCRAFT DOES NOT MEET THE APPLICABLE AIRWORTHINESS REQUIREMENTS AS FOLLOWS

E. THE FOLLOWING RESTRICTIONS ARE CONSIDERED NECESSARY FOR SAFE OPERATION *(Use attachment if necessary)*

F. CERTIFICATION — I hereby certify that I am the registered owner (or his agent) of the aircraft described above, that the aircraft is registered with the Federal Aviation Administration in accordance with Section 501 of the Federal Aviation Act of 1958, and applicable Federal Aviation Regulations, and that the aircraft has been inspected and is airworthy for the flight described.

DATE	NAME AND TITLE *(Print or type)*	SIGNATURE

VIII. AIRWORTHINESS DOCUMENTATION (FAA use only)

- ☐ A. Operating Limitations and Markings in Compliance with FAR 91.31 as Applicable
- ☐ B. Current Operating Limitations Attached
- ☐ C. Data, Drawings, Photographs, etc. *(Attach when required)*
- ☐ D. Current Weight and Balance Information Available in Aircraft
- ☐ E. Major Repair and Alteration, FAA Form 337 *(Attach when required)*
- ☐ F. This Inspection Recorded in Aircraft Records
- ☐ G. Statement of Conformity, FAA Form 8130-9 *(Attach when required)*
- ☐ H. Foreign Airworthiness Certification for Import Aircraft *(Attach when required)*
- ☐ I. Previous Airworthiness Certificate Issued in Accordance with FAR _____ CAR _____ *(Original Attached)*
- ☐ J. Current Airworthiness Certificate Issued in Accordance with FAR _____ *(Copy attached)*

FAA AIRCRAFT REGISTRY
CAMERA NO. 2N DATE: 8/25/93

UNITED STATES OF AMERICA
DEPARTMENT OF TRANSPORTATION—FEDERAL AVIATION ADMINISTRATION

STANDARD AIRWORTHINESS CERTIFICATE

1. NATIONALITY AND REGISTRATION MARKS	2. MANUFACTURER AND MODEL	3. AIRCRAFT SERIAL NUMBER	4. CATEGORY
N-2442H	GRUMMAN G-73	J-13	STANDARD TRANSPORT

5. AUTHORITY AND BASIS FOR ISSUANCE
This airworthiness certificate is issued pursuant to the Federal Aviation Act of 1958 and certifies that, as of the date of issuance, the aircraft to which issued has been inspected and found to conform to the type certificate therefor, to be in condition for safe operation, and has been shown to meet the requirements of the applicable comprehensive and detailed airworthiness code as provided by Annex 8 to the Convention on International Civil Aviation, except as noted herein.
Exceptions:

NONE

6. TERMS AND CONDITIONS
Unless sooner surrendered, suspended, revoked, or a termination date is otherwise established by the Administrator, this airworthiness certificate is effective as long as the maintenance, preventative maintenance, and alterations are performed in accordance with Parts 21, 43, and 91 of the Federal Aviation Regulations, as appropriate, and the aircraft is registered in the United States.

DATE OF ISSUANCE	FAA REPRESENTATIVE	DESIGNATION NUMBER
REPLACEMENT 5-30-80	EARL E. FRANCIS FSDO-19	SO-FSDO-19

Any alteration, reproduction, or misuse of this certificate may be punishable by a fine not exceeding $1,000, or imprisonment not exceeding 3 years, or both. THIS CERTIFICATE MUST BE DISPLAYED IN THE AIRCRAFT IN ACCORDANCE WITH APPLICABLE FEDERAL AVIATION REGULATIONS.

FAA Form 8100-2 (7-67) FORMERLY FAA FORM 1362 GPO 1967-O 270-931

FAA AIRCRAFT REGISTRY
CAMERA NO. 2N DATE: 8/25/93

Form Approved
O.M.B. No. 2120-0018

US Department of Transportation
Federal Aviation Administration

APPLICATION FOR AIRWORTHINESS CERTIFICATE

INSTRUCTIONS — Print or type. Do not write in shaded areas; these are for FAA use only. Submit original only to an authorized FAA Representative. If additional space is required, use an attachment. For special flight permits complete Sections II and VI or VII as applicable.

I. AIRCRAFT DESCRIPTION

1. REGISTRATION MARK	2. AIRCRAFT BUILDER'S NAME (Make)	3. AIRCRAFT MODEL DESIGNATION	4. YR. MFR	FAA CODING
N2442H	Grumman	Mallard G-73	1-7-47	
5. AIRCRAFT SERIAL NO	**6. ENGINE BUILDER'S NAME (Make)**	**7. ENGINE MODEL DESIGNATION**		
N ~~2442H~~ J-13	P-W	1340		
8. NUMBER OF ENGINES	**9. PROPELLER BUILDER'S NAME (Make)**	**10. PROPELLER MODEL DESIGNATION**	**11. AIRCRAFT IS (Check if applicable)**	
2	Hartzell		IMPORT	

II. CERTIFICATION REQUESTED

APPLICATION IS HEREBY MADE FOR: (Check applicable items)

- A 1 [X] STANDARD AIRWORTHINESS CERTIFICATE (Indicate category): 2 NORMAL [ ] UTILITY [ ] ACROBATIC [X] TRANSPORT [ ] GLIDER [ ] BALLOON
- B SPECIAL AIRWORTHINESS CERTIFICATE (Check appropriate items)
  - 2 LIMITED
  - 5 PROVISIONAL (Indicate class): 1 CLASS I; 2 CLASS II
  - 3 RESTRICTED (Indicate operations to be conducted): 1 AGRICULTURE AND PEST CONTROL; 2 AERIAL SURVEYING; 3 AERIAL ADVERTISING; 4 FOREST (Wildlife conservation); 5 PATROLLING; 6 WEATHER CONTROL; 7 CARRIAGE OF CARGO; 0 OTHER (Specify)
  - 4 EXPERIMENTAL (Indicate operations to be conducted): 1 RESEARCH AND DEVELOPMENT; 2 AMATEUR BUILT; 3 EXHIBITION; 4 RACING; 5 CREW TRAINING; MKT SURVEY; 0 TO SHOW COMPLIANCE WITH FAR
  - 8 SPECIAL FLIGHT PERMIT (Indicate operation to be conducted. Then complete Section VI or VII as applicable on reverse side): 1 FERRY FLIGHT FOR REPAIRS, ALTERATIONS, MAINTENANCE OR STORAGE; 2 EVACUATE FROM AREA OF IMPENDING DANGER; 3 OPERATION IN EXCESS OF MAXIMUM CERTIFICATED TAKE-OFF WEIGHT; 4 DELIVERING OR EXPORT; 5 PRODUCTION FLIGHT TESTING; 6 CUSTOMER DEMONSTRATION FLIGHTS
- C 6 MULTIPLE AIRWORTHINESS CERTIFICATE (Check ABOVE Restricted Operation and Standard or Limited as applicable)

III. OWNER'S CERTIFICATION

A. REGISTERED OWNER (As shown on certificate of aircraft registration) — IF DEALER, CHECK HERE → X

NAME	ADDRESS
AMPHIBIAN PARTS INC	4041 NW 25 St Miami FL 33142

B. AIRCRAFT CERTIFICATION BASIS (Check applicable blocks and complete items as indicated)

AIRCRAFT SPECIFICATION OR TYPE CERTIFICATE DATA SHEET (Give No. and Revision No.): CAR 4A	AIRWORTHINESS DIRECTIVES (Check if all applicable AD's complied with and give latest AD No.)
AIRCRAFT LISTING (Give page number(s))	SUPPLEMENTAL TYPE CERTIFICATE (List number of each STC incorporated)

C. AIRCRAFT OPERATION AND MAINTENANCE RECORDS

CHECK IF RECORDS IN COMPLIANCE WITH FAR 91.173	TOTAL AIRFRAME HOURS	3 EXPERIMENTAL ONLY (Enter hours flown since last certificate issued or renewed)
	TT 7124.9	

D. CERTIFICATION — I hereby certify that I am the registered owner (or his agent) of the aircraft described above, that the aircraft is registered with the Federal Aviation Administration in accordance with Section 501 of the Federal Aviation Act of 1958 and applicable Federal Aviation Regulations, and that the aircraft has been inspected and is airworthy and eligible for the airworthiness certificate requested.

DATE OF APPLICATION	NAME AND TITLE (Print or type)	SIGNATURE
6-8-92	~~Amp~~ Dean Franklin owner	Dean H Franklin

IV. INSPECTION AGENCY VERIFICATION

A. THE AIRCRAFT DESCRIBED ABOVE HAS BEEN INSPECTED AND FOUND AIRWORTHY BY (Complete this ... only if FAR 21.183(d) applies)

- 2 FAR PART 121 OR 127 CERTIFICATE HOLDER (Give Certificate No.)
- 3 CERTIFICATED MECHANIC (Give Certificate No.)
- 6 CERTIFICATED REPAIR STATION (Give Certificate No.)
- 5 AIRCRAFT MANUFACTURER (Give name of firm)

DATE	TITLE	SIGNATURE

V. FAA REPRESENTATIVE CERTIFICATION

(Check ALL applicable blocks in items A and B)

A. I find that the aircraft described in Section I or VII meets requirements for:
- [ ] THE CERTIFICATE REQUESTED
- 4 AMENDMENT OR MODIFICATION OF CURRENT AIRWORTHINESS CERTIFICATE

B. Inspection for a special flight permit under Section VII was conducted by:
- [ ] FAA INSPECTOR
- [ ] FAA DESIGNEE
- [ ] CERTIFICATE HOLDER UNDER: [ ] FAR 65 [ ] FAR 121, 127 or 135 [ ] FAR 145

DATE	DISTRICT OFFICE	4 DESIGNEE'S SIGNATURE AND NO.	1 FAA INSPECTOR'S SIGNATURE

FAA AIRCRAFT REGISTRY
CAMERA NO. 2N DATE: 8/25/93

*U.S.GPO:1990-0-766-012/20051

VI. PRODUCTION FLIGHT TESTING

A. MANUFACTURER

NAME	ADDRESS

B. PRODUCTION BASIS *(Check applicable item)*

- ☐ PRODUCTION CERTIFICATE *(Give production certificate number)*
- ☐ TYPE CERTIFICATE ONLY
- ☐ APPROVED PRODUCTION INSPECTION SYSTEM

C. GIVE QUANTITY OF CERTIFICATES REQUIRED FOR OPERATING NEEDS →

DATE OF APPLICATION	NAME AND TITLE *(Print or type)*	SIGNATURE

VII. SPECIAL FLIGHT PERMIT PURPOSES OTHER THAN PRODUCTION FLIGHT TEST

A. DESCRIPTION OF AIRCRAFT

REGISTERED OWNER	ADDRESS
BUILDER *(Make)*	MODEL
SERIAL NUMBER	REGISTRATION MARK

B. DESCRIPTION OF FLIGHT ☐ CUSTOMER DEMONSTRATION FLIGHTS *(Check if applicable)*

FROM	TO	
VIA	DEPARTURE DATE	DURATION

C. CREW REQUIRED TO OPERATE THE AIRCRAFT AND ITS EQUIPMENT

☐ PILOT ☐ CO-PILOT ☐ NAVIGATOR ☐ OTHER *(Specify)*

D. THE AIRCRAFT DOES NOT MEET THE APPLICABLE AIRWORTHINESS REQUIREMENTS AS FOLLOWS

E. THE FOLLOWING RESTRICTIONS ARE CONSIDERED NECESSARY FOR SAFE OPERATION *(Use attachment if necessary)*

F. CERTIFICATION — I hereby certify that I am the registered owner (or his agent) of the aircraft described above, that the aircraft is registered with the Federal Aviation Administration in accordance with Section 501 of the Federal Aviation Act of 1958, and applicable Federal Aviation Regulations, and that the aircraft has been inspected and is airworthy for the flight described.

DATE	NAME AND TITLE *(Print or type)*	SIGNATURE

VIII. AIRWORTHINESS DOCUMENTATION (FAA use only)

- ☐ A. Operating Limitations and Markings in Compliance with FAR 91.31 as Applicable
- ☐ B. Current Operating Limitations Attached
- ☐ C. Data, Drawings, Photographs, etc. *(Attach when required)*
- ☐ D. Current Weight and Balance Information Available in Aircraft
- ☐ E. Major Repair and Alteration, FAA Form 337 *(Attach when required)*
- ☐ F. This Inspection Recorded in Aircraft Records
- ☐ G. Statement of Conformity; FAA Form 8130-9 *(Attach when required)*
- ☐ H. Foreign Airworthiness Certification for Import Aircraft *(Attach when required)*
- ☐ I. Previous Airworthiness Certificate Issued in Accordance with FAR _____ CAR _____ *(Original Attached)*
- ☐ J. Current Airworthiness Certificate Issued in Accordance with FAR _____ *(Copy attached)*

FAA AIRCRAFT REGISTRY
CAMERA NO. 2 DATE: 11-20-92

ATT

DEPARTMENT OF TRANSPORTATION
FEDERAL AVIATION ADMINISTRATION

MAJOR REPAIR AND ALTERATION
(Airframe, Powerplant, Propeller, or Appliance)

Form Approved
Budget Bureau No. 04-R060.1

FOR FAA USE ONLY

OFFICE IDENTIFICATION
SO-FS00 79

INSTRUCTIONS: Print or type all entries. See FAR 43.9, FAR 43 Appendix B, and AC 43.9-1 (or subsequent revision thereof) for instructions and disposition of this form.

1. AIRCRAFT	MAKE: GRUMMAN MALLARD	MODEL: G-73
	SERIAL NO.: J-13	NATIONALITY AND REGISTRATION MARK: N2442H
2. OWNER	NAME (As shown on registration certificate): AMPHIBIAN PARTS	ADDRESS (As shown on registration certificate): 4041 NW 25th ST, MIA. FL. 33142

3. FOR FAA USE ONLY

4. UNIT IDENTIFICATION / 5. TYPE

UNIT	MAKE	MODEL	SERIAL NO.	REPAIR	ALTERATION
AIRFRAME	(As described in item 1 above)			X	X
POWERPLANT					
PROPELLER					
APPLIANCE	TYPE / MANUFACTURER				

6. CONFORMITY STATEMENT

A. AGENCY'S NAME AND ADDRESS	B. KIND OF AGENCY	C. CERTIFICATE NO.
DEAN H. FRANKLIN AVIATION ENT. 4041 NW 25th ST. MIA. FL. 33142	U.S. CERTIFICATED MECHANIC / FOREIGN CERTIFICATED MECHANIC / XXX CERTIFICATED REPAIR STATION / MANUFACTURER	WH4R622M

D. I certify that the repair and/or alteration made to the unit(s) identified in item 4 above and described on the reverse or attachments hereto have been made in accordance with the requirements of Part 43 of the U.S. Federal Aviation Regulations and that the information furnished herein is true and correct to the best of my knowledge.

DATE: 8-17-92

SIGNATURE OF AUTHORIZED INDIVIDUAL: Dean H. Franklin DER 198 2024

7. APPROVAL FOR RETURN TO SERVICE

Pursuant to the authority given persons specified below, the unit identified in item 4 was inspected in the manner prescribed by the Administrator of the Federal Aviation Administration and is ☒ APPROVED ☐ REJECTED

BY: FAA FLT. STANDARDS INSPECTOR ☐ / FAA DESIGNEE ✓ / MANUFACTURER ☐ / REPAIR STATION ☐ / INSPECTION AUTHORIZATION ☐ / CANADIAN DEPARTMENT OF TRANSPORT INSPECTOR OF AIRCRAFT ☐ / OTHER (Specify)

DATE OF APPROVAL OR REJECTION	CERTIFICATE OR DESIGNATION NO.	SIGNATURE OF AUTHORIZED INDIVIDUAL
8-28-92	WH4R622M	Dean H. Franklin

FAA Form 337 (7-67) ☆ U.S. Government Printing Office 1977—772-646/141 (8320)

FAA AIRCRAFT REGISTRY
CAMERA NO. 2 DATE: 11-20-92

NOTICE

Weight and balance or operating limitation changes shall be entered in the appropriate aircraft record. An alteration must be compatible with all previous alterations to assure continued conformity with the applicable airworthiness requirements.

8. DESCRIPTION OF WORK ACCOMPLISHED *(If more space is required, attach additional sheets. Identify with aircraft nationality and registration mark and date work completed.)*

N2442H January 92. Flush Skin Panel insertion Lower Hull Sta 355. Repair per AN01-85AB-3. Appendix II Figure B-6. Sheet 1 - Repair made to left and right side of Hull Sta. 355.

Three(3) ☑ ADDITIONAL SHEETS ARE ATTACHED

FAA AIRCRAFT REGISTRY
CAMERA NO. 2 DATE: 11-20-92

DEPARTMENT OF TRANSPORTATION
FEDERAL AVIATION ADMINISTRATION

STATEMENT OF COMPLIANCE WITH THE FEDERAL AVIATION REGULATIONS

DATE: AUGUST 21, 1992

AIRCRAFT OR AIRCRAFT COMPONENT IDENTIFICATION

MAKE	MODEL NO.	TYPE (Airplane, Radio, Helicopter, etc.)	NAME OF APPLICANT
GRUMMAN	MALLARD	AIRPLANE	DEAN FRANKLIN ENT.

LIST OF DATA

IDENTIFICATION	TITLE
A.T.E., INC. STRUCTURAL REPORT No. 82192	GRUMMAN MALLARD J13 LOWER FUSELAGE SKIN REPAIR. SH 1, SH. 1, REV. (-). THIS DATA APPLIES ONLY TO GRUMMAN MALLARD, A/C SERIAL NO. J13.

PURPOSE OF DATA
TO APPROVE DATA FOR STRUCTURAL REPAIR OF GRUMMAN MALLARD, A/C SERIAL NO. J13.

APPLICABLE REQUIREMENTS (List specific sections)
FAR 25.305, 25.307

CERTIFICATION - Under authority vested by direction of the Administrator and in accordance with conditions and limitations of appointment under Part 183 of the Federal Aviation Regulations, data listed above and on attached sheets numbered _____ _____ have been examined in accordance with established procedures and found to comply with applicable requirements of the Federal Aviation Regulations.

I (We) Therefore ☐ Recommend approval of these data
☒ Approve these data

SIGNATURE(S) OF DESIGNATED ENGINEERING REPRESENTATIVE(S)	DESIGNATION NUMBER(S)	CLASSIFICATION(S)
Hugh M. Roberts	SO-724	STRUCTURAL

FAA Form 8110-3 (11-70) SUPERSEDES PREVIOUS EDITION

FAA AIRCRAFT REGI
CAMERA NO. 2 DAT 11-20-92

AEROSPACE TESTING AND ENGINEERING, INC.

Title: STRUCTURAL REPORT NO. 82192
GRUMMAN MALLARD J13 LOWER FUSELAGE SKIN REPAIR

Prepared by:	Date: 8-21-92
Checked by:	PAGE 1 OF 1 PAGES

REPAIR LOWER FUSELAGE SKIN IN ACCORDANCE WITH:

(REPAIR AREA APPROXIMATELY 30" × 14")

GRUMMAN ALBATROSS REPAIR MANUAL AN01-85AB-3
FIGURE B6, SHEET 1; APPENDIX 2, P. 383, EXCEPT:

FABRICATE REPAIR PARTS FROM .05/2024-T3, QQ-A-250/5.

F_{tu} = 65000 (R301-T), ORIGINAL MATERIAL

F_{tu} = 61000 (2024-T3), REPLACEMENT MATERIAL.

2024-T3 IS A MORE DUCTILE MATERIAL WITH BETTER FATIGUE PROPERTIES THAN R301-T. SOME LOCAL YIELDING MAY OCCUR AT LIMIT LOAD BUT OCCURRENCE OF CRACKS IS LESS LIKELY. (REF. MIL-HDBK-5E).

Gage of Damaged Panel	Panel Stressed Area	Gage of Insertion	Gage of Repair Splice Part	Rivet Size	Rivet Spacing P	Distance Between Rivet Rows R	Edge Distance E	Flange Width C
.025	Critical	.025	.040	AD3	3/8	5/16	1/4	1/4
.032	Critical	.032	.051	AD4	1/2	3/8	5/16	1/4
	semi-critical	.032	.051	AD4	3/4	3/8	5/16	
.040	Critical	.040	.064	AD5	5/8	1/2	3/8	5/16
	semi-critical	.040	.064	AD5	3/4	1/2	3/8	
.051	Critical	.051	.064	AD5	1/2	1/2	3/8	5/16
	semi-critical	.051	.064	AD5	3/4	1/2	3/8	
.064	Critical	.064	.081	AD6	5/8	5/8	7/16	3/8
	semi-critical	.064	.081	AD6	3/4	5/8	7/16	

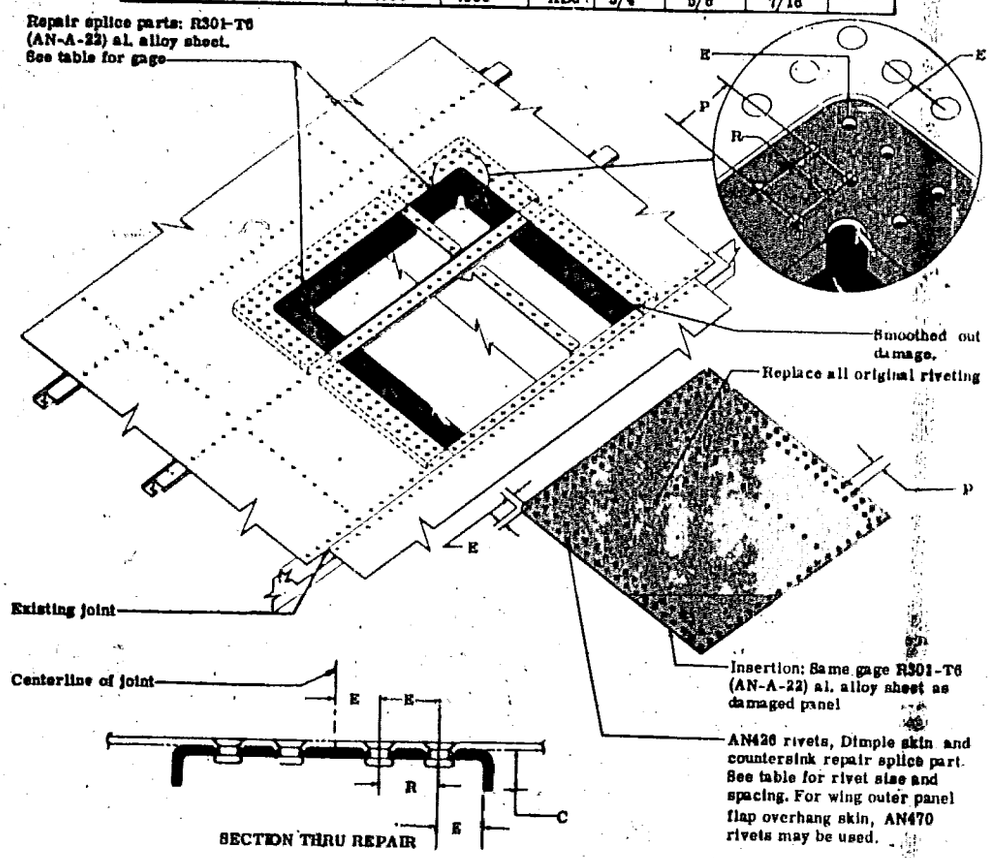

NOTE:

For stringer, frame and capstrip reinforcement in way of skin insertion, See sheet 3.

For watertight sealing, see paragraph 1-37

Stringers, frames and capstrips in way of skin insertion require doublers. See sheet 3.

Figure B-6. (Sheet 1) Flush Skin Panel Insertion

FAA AIRCRAFT REGISTRY
CAMERA NO. 2 DATE: 11-20-92

FAA AIRCRAFT REGISTRY
CAMERA NO. 2 DATE: 9-8-92

US Department of Transportation
Federal Aviation Administration

MAJOR REPAIR AND ALTERATION
(Airframe, Powerplant, Propeller, or Appliance)

Form Approved
OMB No. 2120-0020

For FAA Use Only
Office Identification: SO-17

INSTRUCTIONS: Print or type all entries. See FAR 43.9, FAR 43 Appendix B, and AC 43.9-1 (or subsequent revision thereof) for instructions and disposition of this form. This report is required by law (49 U.S.C. 1421). Failure to report can result in a civil penalty not to exceed $1,000 for each such violation (Section 901 Federal Aviation Act of 1958).

1. Aircraft	Make: GRUMMAN	Model: G-73
	Serial No.: J-13	Nationality and Registration Mark: N2442H
2. Owner	Name (As shown on registration certificate): AMPHIBIAN PARTS	Address (As shown on registration certificate): 4041 NW 25 ST MIAMI, FLORIDA 33142

The data/[illegible] FAA Use: complies with the applicable airworthiness requirements and is approved only for the above described aircraft, subject to conformity inspection by a person authorized in FAR 43, Section 43.7.

6/25/92 Randy B. Moran
Signature of FAA Inspector

4. Unit Identification / **5. Type**

Unit	Make	Model	Serial No.	Repair	Alteration
AIRFRAME	(As described in Item 1 above)				X
POWERPLANT					
PROPELLER					
APPLIANCE	Type				
	Manufacturer				

6. Conformity Statement

A. Agency's Name and Address	B. Kind of Agency	C. Certificate No.
NATIONAL AVIONICS 288B SW 34 ST FT LAUDERDALE FLA 33315	U.S. Certificated Mechanic Foreign Certificated Mechanic X Certificated Repair Station Manufacturer	LI4R337M

D. I certify that the repair and/or alteration made to the unit(s) identified in item 4 above and described on the reverse or attachments hereto have been made in accordance with the requirements of Part 43 of the U.S. Federal Aviation Regulations and that the information furnished herein is true and correct to the best of my knowledge.

Date	Signature of Authorized Individual
6-20-92	

7. Approval for Return To Service

Pursuant to the authority given persons specified below, the unit identified in Item 4 was inspected in the manner prescribed by the Administrator of the Federal Aviation Administration and is ☒ APPROVED ☐ REJECTED

BY						
	FAA Flt. Standards Inspector		Manufacturer		Inspection Authorization	Other (Specify)
	FAA Designee	X	Repair Station		Person Approved by Transport Canada Airworthiness Group	

Date of Approval or Rejection	Certificate or Designation No.	Signature of Authorized Individual
6-25-92	LI4R337M	

FAA Form 337 (12-88)

FAA AIRCRAFT REGISTRY
CAMERA NO. 2 DATE: 9-8-92

NOTICE

Weight and balance or operating limitation changes shall be entered in the appropriate aircraft record. An alteration must be compatible with all previous alterations to assure continued conformity with the applicable airworthiness requirements.

8. Description of Work Accomplished
(If more space is required, attach additional sheets. Identify with aircraft nationality and registration mark and date work completed.)

INSTALLED THE FOLLOWING AVIONICS COMPONENTS AND SYSTEMS REFERENCE THE MANUFACTURERS INSTALLATION MANUALS PART NUMBERS AND REVISIONS

KING KMA-24H-71	006-0586-01	REVISION 1
II MORROW 820 FLYBUDDY GPS	560-0064	REVISION 0
II MORROW 8800 ALTITUDE ENCODER	560-4018B	REVISION 2

ALL WORK PERFORMED IN ACCORDANCE WITH MANUFACTURERS INSTALLATION INSTRUCTIONS AND FAA SPECIFACTIONS REF AC43.13 1A CHAPTER 11 SECTIONS 2,3,4,5,& 7 AND AC43.13 2A CHAPTERS 1,2,& 3.
THIS GPS WAS INSTALLED AS STAND ALONE SYSTEM. THIS GPS SYSTEM HAS A DEDICATED ALTITUDE ENCODEING DEVISE (II MORROW 8800 ENCODER) AND PROVIDES NO SIGNAL TO ANY OTHER A/C SYSTEM. INSTALLED PLACARD ON A/C INSTRUMENT PANEL (GPS NOT FOR PRIMARY NAVIGATIONAL USE) CUSTOMER RECEIVED MANUFACTURERS OPERATION INSTRUCTIONS, MAINTENANCE INSTRUCTIONS, AND SYSTEMS LIMITATIONS

SYSTEMS WERE CHECKED IN ACCORDANCE WITH MANUFACTURERS POST INSTALLATION TEST AND INSPECTION PROCEEDURES.

ELECTRICAL LOAD CHECKED	; NOT IN EXCESS OF 80%
WHISKEY COMPASS CHECKED	; NO WHISKEY COMPASS IN A/C AT THIS TIME
W & B REVISED	; A/C TO BE WEIGHED AFTER COMPLETION OF RESTORATION.
EQUIPMENT LIST REVISED	; 03/24/92
A/C LOG BOOK ENTRY COMPLETED	; 03/24/92

ALL DETAILS OF WORK PERFORMED ON FILE AT THIS REPAIR STATION UNDER WORK ORDER 10375.

XXXXXXXXXXXXXXXXXXXXXXXXXXXXXX END XXXXXXXXXXXXXXXXXXXXXXXXXXXX

☐ Additional Sheets Are Attached

★U.S.GPO:1990-0-560-012/40004

FAA AIRCRAFT REGISTRY
CAMERA NO. 2 DATE: 6-23-83

DEPARTMENT OF TRANSPORTATION
FEDERAL AVIATION ADMINISTRATION

MAJOR REPAIR AND ALTERATION
(Airframe, Powerplant, Propeller, or Appliance)

Form Approved
Budget Bureau No. 04-R060.1

FOR FAA USE ONLY

OFFICE IDENTIFICATION
7-5-61

INSTRUCTIONS: Print or type all entries. See FAR 43.9, FAR 43 Appendix B, and AC 43.9-1 (or subsequent revision thereof) for instructions and disposition of this form.

1. AIRCRAFT	MAKE: GRUMMAN	MODEL: G-73
	SERIAL NO.: J-13	NATIONALITY AND REGISTRATION MARK: N 2442H
2. OWNER	NAME (As shown on registration certificate): Chalk's International Airline, Inc.	ADDRESS (As shown on registration certificate): Watson Island - MacArthur Causeway Miami, Florida 33132

3. FOR FAA USE ONLY

4. UNIT IDENTIFICATION / 5. TYPE

UNIT	MAKE	MODEL	SERIAL NO.	REPAIR	ALTERATION
AIRFRAME	(As described in item 1 above)				X
POWERPLANT					
PROPELLER					
APPLIANCE	TYPE / MANUFACTURER				

6. CONFORMITY STATEMENT

A. AGENCY'S NAME AND ADDRESS	B. KIND OF AGENCY	C. CERTIFICATE NO.
Charles R. Freehling P.O. Box 731 Frederiksted, St. Croix, USVI 00840	X U.S. CERTIFICATED MECHANIC FOREIGN CERTIFICATED MECHANIC CERTIFICATED REPAIR STATION MANUFACTURER	1617154

D. I certify that the repair and/or alteration made to the unit(s) identified in item 4 above and described on the reverse or attachments hereto have been made in accordance with the requirements of Part 43 of the U.S. Federal Aviation Regulations and that the information furnished herein is true and correct to the best of my knowledge.

DATE	SIGNATURE OF AUTHORIZED INDIVIDUAL
November 30, 1979	Charles R. Freehling Charles R Freehling

7. APPROVAL FOR RETURN TO SERVICE

Pursuant to the authority given persons specified below, the unit identified in item 4 was inspected in the manner prescribed by the Administrator of the Federal Aviation Administration and is [X] APPROVED [ ] REJECTED

BY						
	FAA FLT. STANDARDS INSPECTOR	MANUFACTURER	X	INSPECTION AUTHORIZATION	OTHER (Specify)	
	FAA DESIGNEE	REPAIR STATION		CANADIAN DEPARTMENT OF TRANSPORT INSPECTOR OF AIRCRAFT		

DATE OF APPROVAL OR REJECTION	CERTIFICATE OR DESIGNATION NO.	SIGNATURE OF AUTHORIZED INDIVIDUAL
November 30, 1979	1617154	Charles R. Freehling Charles R Freehling

FAA Form 337 (7-67) ☆ U.S. Government Printing Office 1977--772-846/141 (8320)

FAA AIRCRAFT REGISTRY
CAMERA NO. 2 DATE: 6-23-83

NOTICE

Weight and balance or operating limitation changes shall be entered in the appropriate aircraft record. An alteration must be compatible with all previous alterations to assure continued conformity with the applicable airworthiness requirements.

8. DESCRIPTION OF WORK ACCOMPLISHED *(If more space is required, attach additional sheets. Identify with aircraft nationality and registration mark and date work completed.)*

1. Reduction of maximum certificated take-off weight from 12,750 lbs. to 12, 500 lbs in accordance with STC SA635SO.

----------NOTHING FOLLOWS----------

☐ ADDITIONAL SHEETS ARE ATTACHED

FAA AIRCRAFT REGISTRY
CAMERA NO. 2 DATE: 6-23-83

DEPARTMENT OF TRANSPORTATION
FEDERAL AVIATION ADMINISTRATION

MAJOR REPAIR AND ALTERATION
(Airframe, Powerplant, Propeller, or Appliance)

Form Approved
Budget Bureau No. 04-R060.1

FOR FAA USE ONLY

OFFICE IDENTIFICATION MIA GADO 7-3-05

INSTRUCTIONS: Print or type all entries. See FAR 43.9, FAR 43 Appendix B, and AC 43.9-1 (or subsequent revision thereof) for instructions and disposition of this form.

1. AIRCRAFT	MAKE: Grumman	MODEL: G-73
	SERIAL NO.: J-13	NATIONALITY AND REGISTRATION MARK: N2442H
2. OWNER	NAME (As shown on registration certificate): Chalk's International Airline, Inc.	ADDRESS (As shown on registration certificate): Watson Island, MacArthur Causeway Miami, Florida 33132

3. FOR FAA USE ONLY

4. UNIT IDENTIFICATION				5. TYPE	
UNIT	MAKE	MODEL	SERIAL NO.	REPAIR	ALTERATION
AIRFRAME	(As described in item 1 above)				X
POWERPLANT					
PROPELLER					
APPLIANCE	TYPE / MANUFACTURER				

6. CONFORMITY STATEMENT

A. AGENCY'S NAME AND ADDRESS	B. KIND OF AGENCY	C. CERTIFICATE NO.
Chalk's International Airline, Inc. Miami, Florida	U.S. CERTIFICATED MECHANIC; FOREIGN CERTIFICATED MECHANIC; X CERTIFICATED REPAIR STATION; MANUFACTURER	705-135

D. I certify that the repair and/or alteration made to the unit(s) identified in item 4 above and described on the reverse or attachments hereto have been made in accordance with the requirements of Part 43 of the U.S. Federal Aviation Regulations and that the information furnished herein is true and correct to the best of my knowledge.

DATE: 12/9/80 SIGNATURE OF AUTHORIZED INDIVIDUAL: [signature]

7. APPROVAL FOR RETURN TO SERVICE

Pursuant to the authority given persons specified below, the unit identified in item 4 was inspected in the manner prescribed by the Administrator of the Federal Aviation Administration and is [X] APPROVED [ ] REJECTED

BY							OTHER (Specify)
		FAA FLT. STANDARDS INSPECTOR		MANUFACTURER		INSPECTION AUTHORIZATION	
		FAA DESIGNEE	X	REPAIR STATION		CANADIAN DEPARTMENT OF TRANSPORT INSPECTOR OF AIRCRAFT	

DATE OF APPROVAL OR REJECTION	CERTIFICATE OR DESIGNATION NO.	SIGNATURE OF AUTHORIZED INDIVIDUAL
12/9/80	705-135	[signature]

FAA Form 337 (7-67) ☆ U.S. Government Printing Office 1977—772-646/141 (8320)

FAA AIRCRAFT REGISTRY
CAMERA NO. 2 DATE: 6-23-83

NOTICE

Weight and balance or operating limitation changes shall be entered in the appropriate aircraft record. An alteration must be compatible with all previous alterations to assure continued conformity with the applicable airworthiness requirements.

8. DESCRIPTION OF WORK ACCOMPLISHED *(If more space is required, attach additional sheets. Identify with aircraft nationality and registration mark and date work completed.)*

N2442H S/N J-13 Date 12/9/80

Converted one bottle fire extinguishing system to a two bottle fire extinguishing system in accordance with Grumman Drawing 109007.
Replaced the existing "fenwal" spot detector type fire detection system with a continuous loop fire detection system in accordance with MC-GRAW Edison STC #SA2-427 as revised by Conversion Drawing to install sensor cables part No. 244-14482 and 244-12082.
All work done using proper technics and practices as set forth in A.C. 43-13-1A and 43-13-2.

END.

☐ ADDITIONAL SHEETS ARE ATTACHED

FAA AIRCRAFT REGISTRY
CAMERA NO. 2 DATE: 6-23-83

DEPARTMENT OF TRANSPORTATION
FEDERAL AVIATION ADMINISTRATION

Form Approved
Budget Bureau No. 04-R060.1

MAJOR REPAIR AND ALTERATION
(Airframe, Powerplant, Propeller, or Appliance)

FOR FAA USE ONLY
OFFICE IDENTIFICATION
7-5-61

INSTRUCTIONS: Print or type all entries. See FAR 43.9, FAR 43 Appendix B, and AC 43.9-1 (or subsequent revision thereof) for instructions and disposition of this form.

1. AIRCRAFT	MAKE Grumman	MODEL G-73
	SERIAL NO. J-13	NATIONALITY AND REGISTRATION MARK N2442H
2. OWNER	NAME (As shown on registration certificate) Chalk's International Airline	ADDRESS (As shown on registration certificate) 837 City National Bank Miami, Florida 33130

3. FOR FAA USE ONLY

4. UNIT IDENTIFICATION				5. TYPE	
UNIT	MAKE	MODEL	SERIAL NO.	REPAIR	ALTERATION
AIRFRAME	(As described in item 1 above)				X
POWERPLANT					
PROPELLER					
APPLIANCE	TYPE / MANUFACTURER				

6. CONFORMITY STATEMENT

A. AGENCY'S NAME AND ADDRESS	B. KIND OF AGENCY	C. CERTIFICATE NO
Darryl Long Antilles Air Boats Christiansted, St. Croix	X U.S. CERTIFICATED MECHANIC FOREIGN CERTIFICATED MECHANIC CERTIFICATED REPAIR STATION MANUFACTURER	530361413

D. I certify that the repair and/or alteration made to the unit(s) identified in item 4 above and described on the reverse or attachments hereto have been made in accordance with the requirements of Part 43 of the U.S. Federal Aviation Regulations and that the information furnished herein is true and correct to the best of my knowledge.

DATE	SIGNATURE OF AUTHORIZED INDIVIDUAL
November 13, 1980	Darryl Long

7. APPROVAL FOR RETURN TO SERVICE

Pursuant to the authority given persons specified below, the unit identified in item 4 was inspected in the manner prescribed by the Administrator of the Federal Aviation Administration and is [X] APPROVED [ ] REJECTED

BY						
	FAA FLT. STANDARDS INSPECTOR	MANUFACTURER	X	INSPECTION AUTHORIZATION	OTHER (Specify)
	FAA DESIGNEE	REPAIR STATION		CANADIAN DEPARTMENT OF TRANSPORT INSPECTOR OF AIRCRAFT	

DATE OF APPROVAL OR REJECTION	CERTIFICATE OR DESIGNATION NO.	SIGNATURE OF AUTHORIZED INDIVIDUAL
11-13-80	1617154	Charles Hurley

FAA Form 337 (7-67) ☆ U.S. Government Printing Office 1977—772-646/141 (8320)

FAA AIRCRAFT REGISTRY
CAMERA NO. 2 DATE: 6-23-83

NOTICE

Weight and balance or operating limitation changes shall be entered in the appropriate aircraft record. An alteration must be compatible with all previous alterations to assure continued conformity with the applicable airworthiness requirements.

8. DESCRIPTION OF WORK ACCOMPLISHED *(If more space is required, attach additional sheets. Identify with aircraft nationality and registration mark and date work completed.)*

REINSTALL GOODYEAR BRAKES

1. To superceded 337 dated May 28, 1980, installation of Parker-Hannifin Conversion Kit 199-81 consisting of main wheels P/N 40-137; brake assembly P/N 30-103, thus kit installed i/a/w T. C. No. 783.
2. Removed Parker-Hannifin Kit #199-81.
3. Installed Goodyear brake assembly No. 9540148 left and right, normal G-73 wheel and brake.
4. All work done in accordance with Grumman G-73 Service Manual.

NOTHING FOLLOWS

☐ ADDITIONAL SHEETS ARE ATTACHED

FAA AIRCRAFT REGISTRY
CAMERA NO. 2 DATE: 6-23-83

R JAN 9 1981

AC-250

Form Approved
Budget Bureau No. 04-R0058

DEPARTMENT OF TRANSPORTATION
FEDERAL AVIATION ADMINISTRATION

APPLICATION FOR AIRWORTHINESS CERTIFICATE

INSTRUCTIONS—Print or type. Do not write in shaded areas; these are for FAA use only. Submit original only to an authorized FAA Representative. If additional space is required, use an attachment. For special flight permits complete Sections II and VI or VII as applicable.

I. AIRCRAFT DESCRIPTION

1. REGISTRATION MARK	2. AIRCRAFT BUILDER'S NAME (make)	3. AIRCRAFT MODEL DESIGNATION	4. YR. MFG.	FAA CODING
N2442H	Grumman	G-73	1947	3951802
5. AIRCRAFT SERIAL NO.	6. ENGINE BUILDER'S NAME (make)	7. ENGINE MODEL DESIGNATION		52016
J-13	Pratt & Whitney	R-1340-S1H1		
8. NUMBER OF ENGINES	9. PROPELLER BUILDER'S NAME (make)	10. PROPELLER MODEL DESIGNATION		11. AIRCRAFT IS
2	Hamilton Stand.	23 D 40		XXXXXXXXXXXXXXXX

II. CERTIFICATION REQUESTED

APPLICATION IS HEREBY MADE FOR: (Check applicable items)

A 1 X STANDARD AIRWORTHINESS CERT. (Indicate category) NORMAL | UTILITY | ACROBATIC | X TRANSPORT | GLIDER | BALLOON

B SPECIAL AIRWORTHINESS CERTIFICATE (Check appropriate items)

- 2 LIMITED
- 5 PROVISIONAL (Indicate class): 1 CLASS I; 2 CLASS II
- 3 RESTRICTED (Indicate operation(s) to be conducted): 1 AGRICULTURE & PEST CONTROL; 2 AERIAL SURVEYING; 3 AERIAL ADVERTISING; 4 FOREST (Wild life conservation); 5 PATROLLING; 6 WEATHER CONTROL; 0 OTHER (Specify)
- 4 EXPERIMENTAL (Indicate operation(s) to be conducted): 1 RESEARCH AND DEVELOPMENT; 2 AMATEUR BUILT; 3 EXHIBITION; 4 RACING; 5 CREW TRAINING; 6 MKT. SURVEY; 0 TO SHOW COMPLIANCE WITH FAR
- 8 SPECIAL FLIGHT PERMIT (Indicate operation to be conducted then complete Section VI or VII as applicable on reverse side): 1 FERRY FLIGHT FOR REPAIRS, ALTERATIONS, MAINTENANCE OR STORAGE; 2 EVACUATE FROM AREA OF IMPENDING DANGER; 3 OPERATION IN EXCESS OF MAX. CERTIFICATED TAKE-OFF WEIGHT; 4 DELIVERING OR EXPORT; 5 PRODUCTION FLIGHT TESTING

C 6 MULTIPLE AIRWORTHINESS CERTIFICATE (Check appropriate Restricted Operation and Standard or Limited as applicable above)

III. OWNER'S CERTIFICATION

A. REGISTERED OWNER (As shown on Certificate of Aircraft Registration) IF DEALER, CHECK HERE →

NAME: Chalks Airline Inc.
ADDRESS: 837 City National Bank Miami, Florida 33130

B. AIRCRAFT CERTIFICATION BASIS (Check applicable blocks and complete items as indicated)

AIRCRAFT SPECIFICATION OR TYPE CERTIFICATION DATA SHEET (Give No. and Revision No.): TCNO. 783
AIRWORTHINESS DIRECTIVES (Check if all applicable AD's complied with and give latest AD No.): 80-08
AIRCRAFT LISTING (Give page No(s).):
SUPPLEMENTAL TYPE CERTIFICATE (List number of each STC incorporated): SA412GL

C. AIRCRAFT OPERATION AND MAINTENANCE RECORDS

CHECK IF RECORDS IN COMPLIANCE WITH FAR 91.173
TOTAL AIRFRAME HOURS—Enter for used aircraft only: 6058.0
3 EXPERIMENTAL ONLY—Enter hours flown since last certificate issued or renewed: 1.05

D. CERTIFICATION—I hereby certify that I am the owner (or his agent) of the aircraft described above; that the aircraft is registered with the Federal Aviation Administration in accordance with Section 501 of the Federal Aviation Act of 1958, and applicable Federal Aviation Regulations; and that the aircraft has been inspected and is airworthy and eligible for the airworthiness certificate requested.

DATE OF APPLICATION: May 30, 1980
NAME AND TITLE (Print or type): Chief Inspector
SIGNATURE: Charles Freehling

IV. INSPECTION AGENCY VERIFICATION

A. THE AIRCRAFT DESCRIBED ABOVE HAS BEEN INSPECTED AND FOUND AIRWORTHY BY: (Complete this section only if FAR 21.183 (d) applies)

2 FAR PART 121 OR 127 CERTIFICATE HOLDER (Give Certificate No.)
3 CERTIFICATED MECHANIC (Give Certificate No.): A&P 1617154
4 CERTIFICATED REPAIR STATION (Give Certificate No.)
5 AIRCRAFT MANUFACTURER (Give Name of Firm): Antilles Air Boats

DATE: May 30, 1980
TITLE: Chief Inspector
SIGNATURE: Charles Freehling

V. FAA REPRESENTATIVE CERTIFICATION

(Check ALL applicable blocks) I find that the aircraft described in Section I or VII meets the requirements for: [XX] The certification requested, or [4] Amendment or modification of its current airworthiness certificate. Inspection for a special flight permit under Section VII was conducted by: [ ] FAA Inspector; certificate holder under [ ] FAA 65, [ ] FAA 121 or 127, or [ ] FAA 145.

DATE: 5/30/80
DISTRICT OFFICE: Miami-EMDO-43-Ramey
4
DESIGNEE'S SIGNATURE AND NO.:
1
FAA INSPECTOR'S SIGNATURE: William Z. Black

FAA Form 8130-6 (7-70)

FAA AIRCRAFT REGISTRY
CAMERA NO. 2 DATE: 6-23-83

VI. PRODUCTION FLIGHT TESTING

A. MANUFACTURER

NAME	ADDRESS

B. PRODUCTION BASIS *(Check applicable item)*

- [ ] PRODUCTION CERTIFICATE *(Give production certificate number)*
- [ ] TYPE CERTIFICATE ONLY
- [ ] APPROVED PRODUCTION INSPECTION SYSTEM

C. GIVE QUANTITY OF CERTIFICATES REQUIRED FOR OPERATING NEEDS:

DATE OF APPLICATION	NAME AND TITLE *(Print or type)*	SIGNATURE

VII. SPECIAL FLIGHT PERMIT PURPOSES OTHER THAN PRODUCTION FLIGHT TEST

A. DESCRIPTION OF AIRCRAFT

REGISTERED OWNER	ADDRESS
BUILDER *(Make)*	MODEL
SERIAL NUMBER	REGISTRATION MARK

B. DESCRIPTION OF FLIGHT

FROM	TO	
VIA	DEPARTURE DATE	DURATION

C. CREW REQUIRED TO OPERATE THE AIRCRAFT AND ITS EQUIPMENT

- [ ] PILOT
- [ ] CO-PILOT
- [ ] NAVIGATOR
- [ ] OTHER *(Specify)*

D. THE AIRCRAFT DOES NOT MEET THE APPLICABLE AIRWORTHINESS REQUIREMENTS AS FOLLOWS:

E. THE FOLLOWING RESTRICTIONS ARE CONSIDERED NECESSARY FOR SAFE OPERATION *(Use attachment if necessary)*

F. **CERTIFICATION**—I hereby certify that I am the registered owner (or his agent) of the aircraft described above; that the aircraft is registered with the Federal Aviation Administration in accordance with Section 501 of the Federal Aviation Act of 1958, and applicable Federal Aviation Regulations; and that the aircraft has been inspected and is airworthy for the flight described.

DATE	NAME AND TITLE *(Print or type)*	SIGNATURE

VIII. AIRWORTHINESS DOCUMENTATION (FAA use only)

- [X] A. Operating Limitations and Markings in Compliance with FAR 91.31 as Applicable
- [ ] B. Current Operating Limitations Attached
- [ ] C. Data, Drawings, Photographs, etc. *(Attach when required)*
- [X] D. Current Weight and Balance Information Available in Aircraft
- [X] E. Major Repair and Alteration, FAA 337 *(Attach when required)*
- [X] F. This Inspection Recorded in Aircraft Records
- [X] G. Statement of Conformity, FAA Form 317 *(Attach when required)*
- [ ] H. Foreign Airworthiness Certification for Import Aircraft *(Attach when required)*
- [X] I. Previous Airworthiness Certificate Issued in Accordance with FAR 21.191b CAR _____ *(Original attached)*
- [X] J. Current Airworthiness Certificate Issued in Accordance with FAR 21.183d _____ *(Copy attached)*

★1975-G.P.O.-1703-M/673-994/176

FAA AIRCRAFT REGISTRY
CAMERA NO. 2 DATE: 6-23-83

DEPARTMENT OF TRANSPORTATION
FEDERAL AVIATION ADMINISTRATION

Form Approved
Budget Bureau No. 04-R060.1

FOR FAA USE ONLY
OFFICE IDENTIFICATION

MAJOR REPAIR AND ALTERATION
(Airframe, Powerplant, Propeller, or Appliance)

INSTRUCTIONS: Print or type all entries. See FAR 43.9, FAR 43 Appendix B, and AC 43.9-1 (or subsequent revision thereof) for instructions and disposition of this form.

1. AIRCRAFT	MAKE: Grumman	MODEL: G-73
	SERIAL NO.: J-13	NATIONALITY AND REGISTRATION MARK: N2442H
2. OWNER	NAME (As shown on registration certificate): Chalks International Airline, Inc.	ADDRESS (As shown on registration certificate): 837 City National Bank Miami, Florida 33130

3. FOR FAA USE ONLY

Satisfactory installation of Parker Hannifin Conversion Kit 199-81 consisting of main wheels P/N 40-137; brake assy. P/N 30-107; and mounting bolts, nuts and washers.

William Z. Black
William Z. Black MIA-EMDO-43

4. UNIT IDENTIFICATION / 5. TYPE

UNIT	MAKE	MODEL	SERIAL NO.	REPAIR	ALTERATION
AIRFRAME	********** (As described in item 1 above) **********				X
POWERPLANT					
PROPELLER					
APPLIANCE	TYPE / MANUFACTURER				

6. CONFORMITY STATEMENT

A. AGENCY'S NAME AND ADDRESS	B. KIND OF AGENCY	C. CERTIFICATE NO.
Charles R. Freehling P.O. Box 731 Frederiksted, St. Croix 00840	X U.S. CERTIFICATED MECHANIC FOREIGN CERTIFICATED MECHANIC CERTIFICATED REPAIR STATION MANUFACTURER	A&P 1617154

D. I certify that the repair and/or alteration made to the unit(s) identified in item 4 above and described on the reverse or attachments hereto have been made in accordance with the requirements of Part 43 of the U.S. Federal Aviation Regulations and that the information furnished herein is true and correct to the best of my knowledge.

DATE	SIGNATURE OF AUTHORIZED INDIVIDUAL
May 28, 1980	Charles R. Freehling Charles R Freehling

7. APPROVAL FOR RETURN TO SERVICE

Pursuant to the authority given persons specified below, the unit identified in item 4 was inspected in the manner prescribed by the Administrator of the Federal Aviation Administration and is ☒ APPROVED ☐ REJECTED

BY							
	FAA FLT. STANDARDS INSPECTOR		MANUFACTURER	X	INSPECTION AUTHORIZATION	OTHER (Specify)	
	FAA DESIGNEE		REPAIR STATION		CANADIAN DEPARTMENT OF TRANSPORT INSPECTOR OF AIRCRAFT		

DATE OF APPROVAL OR REJECTION	CERTIFICATE OR DESIGNATION NO.	SIGNATURE OF AUTHORIZED INDIVIDUAL
May 28, 1980	1617154	Charles R. Freehling Charles R Freehling

FAA Form 337 (7-67) ☆ U.S. Government Printing Office 1967—772-546/141 (8320)

FAA AIRCRAFT REGISTRY
CAMERA NO. 2 DATE: 6-23-83

NOTICE

Weight and balance or operating limitation changes shall be entered in the appropriate aircraft record. An alteration must be compatible with all previous alterations to assure continued conformity with the applicable airworthiness requirements.

8. DESCRIPTION OF WORK ACCOMPLISHED *(If more space is required, attach additional sheets. Identify with aircraft nationality and registration mark and date work completed.)*

1. Removed Good Year brake assembly No. 9540148 left and right.
2. Modifyed P/N 69822 axle flange, using mounting template per installation Parker Drawing 50-55.
3. Installed Parker Hannifin Conversion Kit 199-81 consisting of main wheels P/N 40-137; Brake assy. P/N 30-103; and mounting bolts, nuts and washers (AN-Hardware).
4. All work done in accordance with Grumman G-73 service manual and T.C. No. 783.

---------- Nothing Follows.

☐ ADDITIONAL SHEETS ARE ATTACHED

FAA AIRCRAFT REGISTRY
CAMERA NO. 2 DATE: 6-23-83

UNITED STATES OF AMERICA
DEPARTMENT OF TRANSPORTATION
FEDERAL AVIATION ADMINISTRATION

Form Approved Budget Bureau No. 04-R0146

STATEMENT OF CONFORMITY

SECTION I – AIRCRAFT

1. MAKE Grumman	2. MODEL G-73
3. SERIAL NO. J-13	4. REGISTRATION NO. N2442H

SECTION II – ENGINE

1. MAKE	2. MODEL
3. SERIAL NO.	

SECTION III – PROPELLER

1. MAKE	2. HUB MODEL
3. BLADE MODEL	4. HUB SERIAL NO.
5. BLADE SERIAL NO.	

SECTION IV – CERTIFICATION

I hereby certify that:

[X] A. I have complied with Section 21.33(a).

[ ] B. The aircraft described above, produced under type certificate only (FAR 21 Subpart F), conforms to its type certificate, is in a condition for safe operation, and was flight checked on _____. (Date)

[ ] C. The engine or propeller described above, presented herewith for type certification, conforms to the type design therefor.

[ ] D. The engine or propeller described above produced under type certificate only (FAR 21 Subpart F), conforms to its type certificate and is in a condition for safe operation. The engine or, if applicable, the variable pitch propeller was subjected by the manufacturer to a final operational check on _____. (Date)

Deviations: This certifies that the installation of the conversion kit 199-81 on the aircraft was given a 100% conformity inspection with requirements of installation drawing 50-55, and the following parts and assemblies were given a 100% conformity inspection with requirements of Aircraft Wheel & Brake Division drawings and specifications.

Kit 199-81 consists of:

Installation Drawing.....50-55 dated 12/11/79
Main Wheel Assembly.....40-137 dated 06/08/79, Rev. A 09/04/79
Brake Assembly.....30-103 dated 04/13/77. Rev. A 05/02/79
Mounting Template.....110-50 dated 08/15/79
Bolt - Mounting.....103-403 (AN7-11A)
Nut - Mounting.....94-122 (AN365-720)
Washer - Mounting.....95-123 (AN960-716)
Brake Lining Conditioning Sheet

SIGNATURE OF CERTIFIER Charles Freehling	TITLE Chief Inspector
ORGANIZATION Antilles Air Boats	DATE 5/26/80

FAA Form 317 (11-67) SUPERSEDES PREVIOUS EDITION

INSTRUCTIONS

This form should be submitted to a representative of the Administrator under the following circumstances:

1. By the applicant for a type certificate or a supplemental type certificate at the time he presents an aircraft or parts thereof to the FAA for tests.

2. By the applicant for a type certificate or a supplemental type certificate for each engine or propeller submitted for type certification.

3. By the type certificate holder or licensee manufacturing products under a type certificate only, upon the initial transfer by him of the ownership of each product or upon application for the original issue of an aircraft airworthiness certificate, or an Airworthiness Approval Tag (FAA Form 186).

This form should be completed as follows:

Section I. Aircraft. Complete the pertinent part of only this section when certification covers an aircraft or part thereof.

Section II. Engine. Complete this section when certification covers an engine.

Section III. Propeller. Complete this section when certification covers a propeller.

Section IV. Certification.

Item A. Check this block when an aircraft or part thereof is presented for flight or ground tests during type certification or supplemental type certification.

Item B. Check this block when the holder or licensee of a type certificate only, initially transfers the ownership of an aircraft manufactured under that type certificate, or applies for the original issuance of an airworthiness certificate.

Item C. Check this block when an engine or propeller is presented for type certification.

Item D. Check this block when an engine or propeller is presented for airworthiness approval and insert the date the product completed a final operational check.

The certification must be signed by an authorized person who holds a responsible position in the manufacturing organization.

FAA AIRCRAFT REGISTRY
CAMERA NO. 2 DATE: 6-23-83

UNITED STATES OF AMERICA
DEPARTMENT OF TRANSPORTATION—FEDERAL AVIATION ADMINISTRATION

STANDARD AIRWORTHINESS CERTIFICATE

1. NATIONALITY AND REGISTRATION MARKS	2. MANUFACTURER AND MODEL	3. AIRCRAFT SERIAL NUMBER	4. CATEGORY
N-2442H	Grumman G-73	I-13	TRANSPORT

5. AUTHORITY AND BASIS FOR ISSUANCE
This airworthiness certificate is issued pursuant to the Federal Aviation Act of 1958 and certifies that, as of the date of issuance, the aircraft to which issued has been inspected and found to conform to the type certificate therefor, to be in condition for safe operation, and that it has shown to meet the requirements of the applicable comprehensive and detailed airworthiness code as prescribed by Annex 8 to the Convention on International Civil Aviation, except as noted herein.
Exceptions:

None

6. TERMS AND CONDITIONS
Unless sooner surrendered, suspended, revoked, or a termination date is otherwise established by the Administrator, this airworthiness certificate is effective as long as the maintenance, preventative maintenance, and alterations are performed in accordance with Parts 43, 45, and 91 of the Federal Aviation Regulations, as appropriate, and the aircraft is registered in the United States.

DATE OF ISSUANCE	FAA REPRESENTATIVE	DESIGNATION NUMBER
REPLACEMENT 3-8-79	CARLENTINE SINGLETARY	7-3-05

Any alteration, reproduction, or misuse of this certificate may be punishable by a fine not exceeding $1,000, or imprisonment not exceeding 3 years, or both. THIS CERTIFICATE MUST BE DISPLAYED IN THE AIRCRAFT IN ACCORDANCE WITH APPLICABLE FEDERAL AVIATION REGULATIONS.

FAA Form 8100-2 (7-67) FORMERLY FAA FORM 1362 GPO : 1967-O-270 831

FAA AIRCRAFT REGISTRY
CAMERA NO. 2 DATE: 6-23-83

FAA AIRCRAFT REGISTRY
CAMERA NO. 2 DATE: 6-23-83

UNITED STATES OF AMERICA
DEPARTMENT OF TRANSPORTATION — FEDERAL AVIATION ADMINISTRATION

SPECIAL AIRWORTHINESS CERTIFICATE

A	CLASSIFICATION: EXPERIMENTAL		
	PURPOSE: TO SHOW COMPLIANCE WITH FAR'S		
B	MANUFACTURER	NAME N/A	
		ADDRESS N/A	
C	FLIGHT	FROM N/A	
		TO N/A	
D	N— 2442 H		SERIAL NO. J-13
	BUILDER Grumman		MODEL G-73
E	DATE OF ISSUANCE May 26, 1980		EXPIRY June 26, 1980
	OPERATING LIMITATIONS DATED May 26, 1980		AND PART OF THIS CERTIFICATE
	SIGNATURE OF FAA REPRESENTATIVE William Z. Black		DESIGNATION OR OFFICE NO. Miami EMDO-43 Ramey

Any alteration, reproduction, or misuse of this certificate may be punishable by a fine not exceeding $1,000 or imprisonment not exceeding 3 years, or both. THIS CERTIFICATE MUST BE DISPLAYED IN THE AIRCRAFT IN ACCORDANCE WITH APPLICABLE FEDERAL AVIATION REGULATIONS.

FAA FORM 8130-7 (3-69) SUPERSEDES FAA FORMS 1362-B; 8100-3; 8130-8 *SEE REVERSE SIDE*

FAA AIRCRAFT REGISTRY
CAMERA NO. 2 DATE: 6-23-83

	This airworthiness certificate is issued under the authority of the Federal Aviation Act of 1958 and the Federal Aviation Regulations (R).
B	This airworthiness certificate authorizes the manufacturer named on the reverse side to conduct production flight tests, and only production flight tests, of aircraft registered in his name. No person may conduct production flight tests under this certificate: (1) Carrying persons or property for compensation or hire; and/or (2) Carrying persons not essential to the purpose of the flight.
C	This airworthiness certificate authorizes the flight specified on the reverse side for the purpose shown in Block A.
D	This airworthiness certificate certifies that, as of the date of issuance, the aircraft to which issued has been inspected and found to meet the requirements of the applicable FAR. The aircraft does not meet the requirements of the applicable comprehensive and detailed airworthiness code as provided by Annex 8 to the Convention On International Civil Aviation. No person may operate the aircraft described on the reverse side: (1) except in accordance with the applicable FAR and in accordance with conditions and limitations which may be prescribed by the Administrator as part of this certificate; (2) over any foreign country without the special permission of that country.
E	Unless sooner surrendered, suspended, or revoked, this airworthiness certificate is effective for the duration and under the conditions prescribed in FAR Part 21, Section 21.181 or 21.217.

FAA AIRCRAFT REGISTRY
CAMERA NO. 2 DATE: 6-23-83

DEPARTMENT OF TRANSPORTATION
FEDERAL AVIATION ADMINISTRATION SOUTHERN REGION

EXPERIMENTAL OPERATING LIMITATIONS

PURPOSE: Experimental Flight Test

MAKE: Grumman MODEL: G-73 SERIAL NO.: G-73 REG. NO.: N2442H

DATE OF ISSUANCE: May 26, 1980 EXPIRATION DATE: June 26, 1980 Cancelled

/X/ 1. No person may operate this aircraft for other than the purpose for which the special purpose airworthiness certificate was issued and the aircraft shall be operated in accordance with the applicable FAA Air Traffic and General Operating Rules, FAR Part 91.

/X/ 2. All flights shall be conducted within the geographical area described as follows: 50 mile radius from West Seaplane Ramp, Christiansted, St. Croix

/X/ 3. All proficiency flights shall be conducted within the following boundaries: 50 mile radius of St. Croix.

/X/ 4. No operations, including takeoffs and landings, shall be conducted over densely populated areas or in congested airways, except those takeoffs and landings authorized as follows: No expections

/_/ 5. This aircraft is authorized for flights at the following event(s):

/_/ 6. Flights between the aircraft's base of operation and each above authorized event shall be approved by the local FAA office having cognizance over the aircraft's base of operation.

/X/ 7. Operator of this aircraft shall notify the control tower of the experimental nature of this aircraft when operating into or out of airports with operating control towers.

/X/ 8. The pilot-in-command of this aircraft must, as applicable, hold an appropriate category/class rating, have an aircraft type rating, have a flight instructor's log book endorsement or possess a "Letter of Authorization" issued by an FAA General Aviation or Air Carrier Operations Inspector.

/X/ 9. This aircraft shall not be flown unless it is maintained and operated in accordance with appropriate military technical publications or manufacturer's instructions for the type and model of aircraft.

/X/ 10. Unless appropriately equipped for night and/or instrument flight in accordance with FAR 91.33, this aircraft shall be operated Day VFR only.

/X/ 11. This aircraft shall contain the placards, markings, etc., required by FAR 91.31.

FAA AIRCRAFT REGISTRY
CAMERA NO. 2 DATE: 6-23-83

Typed by #1

/X/ 12. No person may operate this aircraft for carrying persons or property for compensation or hire.

/X/ 13. No person may be carried in the aircraft during flight unless that person is essential to the purpose of the flight.

/X/ 14. The person operating this aircraft shall advise each person carried of the experimental nature of this aircraft.

/X/ 15. This aircraft is prohibited from acrobatic flight that is an intentional maneuver involving an abrupt change in the aircraft's attitude, an abnormall attitude, or abonormal acceleration not necessary for normal flight.

/X/ 16. Any major change to this aircraft, is defined by FAR 21.93, invalidates the special airworthiness certificate issued for this aircraft.

/X/ 17. This aircraft does not meet the requirements of the applicable comprehensive and detailed airworthiness code as provided by Annex 8 to the Convention on International Civil Aviation. This aircraft may not be operated over any foreign county without the special permission of that country.

/_/ 18. This certificate may be amended after completion of successful Flight Testing, consisting of _____ Flight Hours.

/_/ 19. Other: _____

OFFICE: Miami - EMDO-43 - Ramey LOCATION: Ramey, Puerto Rico 00604

FAA INSPECTOR: William Z. Black DATE: May 26, 1980

/_/ Those Operational Limitations having checks are applicable to this aircraft.

FAA AIRCRAFT REGISTRY
CAMERA NO. 2 DATE: 6-23-83

R JAN 9 1981

Form Approved
Budget Bureau No. 04-R0056

DEPARTMENT OF TRANSPORTATION
FEDERAL AVIATION ADMINISTRATION

APPLICATION FOR AIRWORTHINESS CERTIFICATE

INSTRUCTIONS—Print or type. Do not write in shaded areas, these are for FAA use only. Submit original only to an authorized FAA Representative. If additional space is required, use an attachment. For special flight permits complete Sections II and VI or VII as applicable.

I. AIRCRAFT DESCRIPTION

1. REGISTRATION MARK: N2442 H	2. AIRCRAFT BUILDER'S NAME (make): Grumman	3. AIRCRAFT MODEL DESIGNATION: G-73	4. YR. MFG.: 1947
5. AIRCRAFT SERIAL NO.: J-13	6. ENGINE BUILDER'S NAME (make): Pratt & Whitney	7. ENGINE MODEL DESIGNATION: R-1340-S1H1	FAA CODING: 3951802 / 52016
8. NUMBER OF ENGINES: 2	9. PROPELLER BUILDER'S NAME (make): Hamilton Stand.	10. PROPELLER MODEL DESIGNATION: 23 D 40	11. AIRCRAFT IS: XXXXXXXXXXXXXXXXXX

II. CERTIFICATION REQUESTED

APPLICATION IS HEREBY MADE FOR: (Check applicable items)

A 1 STANDARD AIRWORTHINESS CERT. (Indicate category) — NORMAL | UTILITY | ACROBATIC | TRANSPORT | GLIDER | BALLOON

B X SPECIAL AIRWORTHINESS CERTIFICATE (Check appropriate items)

- 2 LIMITED
- 5 PROVISIONAL (Indicate class): 1 CLASS I; 2 CLASS II
- 3 RESTRICTED (Indicate operation(s) to be conducted): 1 AGRICULTURE & PEST CONTROL; 2 AERIAL SURVEYING; 3 AERIAL ADVERTISING; 4 FOREST (Wild life conservation); 5 PATROLLING; 6 WEATHER CONTROL; 0 OTHER (Specify)
- 4 X EXPERIMENTAL (Indicate operation(s) to be conducted): 1 RESEARCH AND DEVELOPMENT; 2 AMATEUR BUILT; 3 EXHIBITION; 4 RACING; 5 CREW TRAINING; 6 MKT. SURVEY; 0 X TO SHOW COMPLIANCE WITH FAR
- 8 SPECIAL FLIGHT PERMIT (Indicate operation to be conducted then complete Section VI or VII as applicable on reverse side): 1 FERRY FLIGHT FOR REPAIRS, ALTERATIONS, MAINTENANCE OR STORAGE; 2 EVACUATE FROM AREA OF IMPENDING DANGER; 3 OPERATION IN EXCESS OF MAX. CERTIFICATED TAKE-OFF WEIGHT; 4 DELIVERING OR EXPORT; 5 PRODUCTION FLIGHT TESTING

C 6 MULTIPLE AIRWORTHINESS CERTIFICATE (Check appropriate Restricted Operation and Standard or Limited as applicable above)

III. OWNER'S CERTIFICATION

A. REGISTERED OWNER (As shown on Certificate of Aircraft Registration) — IF DEALER, CHECK HERE →

NAME: Chalks Airline Inc.
ADDRESS: 837 City National Bank, Miami, Florida 33130

B. AIRCRAFT CERTIFICATION BASIS (Check applicable blocks and complete items as indicated)

- AIRCRAFT SPECIFICATION OR TYPE CERTIFICATION DATA SHEET (Give No. and Revision No.): X
- AIRWORTHINESS DIRECTIVES (Check if all applicable AD's complied with and give latest AD No.): X
- AIRCRAFT LISTING (Give page No(s).): X
- SUPPLEMENTAL TYPE CERTIFICATE (List number of each STC incorporated): X

C. AIRCRAFT OPERATION AND MAINTENANCE RECORDS

- CHECK IF RECORDS IN COMPLIANCE WITH FAR 91.173
- TOTAL AIRFRAME HOURS—Enter for used aircraft only: 6057.0
- 3 EXPERIMENTAL ONLY—Enter hours flown since last certificate issued or renewed

D. CERTIFICATION—I hereby certify that I am the owner (or his agent) of the aircraft described above; that the aircraft is registered with the Federal Aviation Administration in accordance with Section 501 of the Federal Aviation Act of 1958; and applicable Federal Aviation Regulations; and that the aircraft has been inspected and is airworthy and eligible for the airworthiness certificate requested.

DATE OF APPLICATION	NAME AND TITLE (Print or type)	SIGNATURE
May 26, 1980	Charles Freehling	Charles Freehling

IV. INSPECTION AGENCY VERIFICATION

A. THE AIRCRAFT DESCRIBED ABOVE HAS BEEN INSPECTED AND FOUND AIRWORTHY BY: (Complete this section only if FAR 21.183 (d) applies)

- 2 FAR PART 121 OR 127 CERTIFICATE HOLDER (Give Certificate No.)
- 3 CERTIFICATED MECHANIC (Give Certificate No.)
- 6 CERTIFICATED REPAIR STATION (Give Certificate No.)
- 5 AIRCRAFT MANUFACTURER (Give Name of Firm)

DATE | TITLE | SIGNATURE

V. FAA REPRESENTATIVE CERTIFICATION

(Check ALL applicable blocks) I find that the aircraft described in Section I or VII meets the requirements for: [X] The certification requested, or [4] Amendment or modification of its current airworthiness certificate. Inspection for a special flight permit under Section VII was conducted by: [ ] FAA Inspector; certificate holder under [ ] FAR 65, [ ] FAR 121 or 127, or [ ] FAR 145.

DATE	DISTRICT OFFICE	DESIGNEE'S SIGNATURE AND NO.	FAA INSPECTOR'S SIGNATURE
5/26/80	Miami EMDC-43 Ramey	4	1 William Z. Black William Z. Black

FAA Form 8130-5 (7-70)

FAA AIRCRAFT REGISTRY
CAMERA NO. 2 DATE: 6-23-83

VI. PRODUCTION FLIGHT TESTING

A. MANUFACTURER

NAME	ADDRESS

B. PRODUCTION BASIS *(Check applicable item)*

- [ ] PRODUCTION CERTIFICATE *(Give production certificate number)*
- [ ] TYPE CERTIFICATE ONLY
- [ ] APPROVED PRODUCTION INSPECTION SYSTEM

C. GIVE QUANTITY OF CERTIFICATES REQUIRED FOR OPERATING NEEDS:

DATE OF APPLICATION	NAME AND TITLE *(Print or type)*	SIGNATURE

VII. SPECIAL FLIGHT PERMIT PURPOSES OTHER THAN PRODUCTION FLIGHT TEST

A. DESCRIPTION OF AIRCRAFT

REGISTERED OWNER	ADDRESS
BUILDER *(Maker)*	MODEL
SERIAL NUMBER	REGISTRATION MARK

B. DESCRIPTION OF FLIGHT

FROM	TO	
VIA	DEPARTURE DATE	DURATION

C. CREW REQUIRED TO OPERATE THE AIRCRAFT AND ITS EQUIPMENT

- [ ] PILOT
- [ ] CO-PILOT
- [ ] NAVIGATOR
- [ ] OTHER *(Specify)*

D. THE AIRCRAFT DOES NOT MEET THE APPLICABLE AIRWORTHINESS REQUIREMENTS AS FOLLOWS:

E. THE FOLLOWING RESTRICTIONS ARE CONSIDERED NECESSARY FOR SAFE OPERATION *(Use attachment if necessary)*

F. **CERTIFICATION**—I hereby certify that I am the registered owner (or his agent) of the aircraft described above; that the aircraft is registered with the Federal Aviation Administration in accordance with Section 601 of the Federal Aviation Act of 1958, and applicable Federal Aviation Regulations; and that the aircraft has been inspected and is airworthy for the flight described.

DATE	NAME AND TITLE *(Print or type)*	SIGNATURE

VIII. AIRWORTHINESS DOCUMENTATION (FAA use only)

- [ ] A. Operating Limitations and Markings in Compliance with FAR 91.31 as Applicable
- [ ] B. Current Operating Limitations Attached
- [ ] C. Data, Drawings, Photographs, etc. *(Attach when required)*
- [ ] D. Current Weight and Balance Information Available in Aircraft
- [ ] E. Major Repair and Alteration, FAA 337 *(Attach when required)*
- [ ] F. This Inspection Recorded in Aircraft Records
- [ ] G. Statement of Conformity, FAA Form 317 *(Attach when required)*
- [ ] H. Foreign Airworthiness Certification for Import Aircraft *(Attach when required)*
- [X] I. Previous Airworthiness Certificate Issued in Accordance with FAR 21.183 CAR CAR4A *(Original attached)*
- [ ] J. Current Airworthiness Certificate Issued in Accordance with FAR 21.191 (b) *(Copy attached)*

FAA AIRCRAFT REGISTRY
CAMERA NO. 2 DATE: 6-27-83

UNITED STATES OF AMERICA
DEPARTMENT OF TRANSPORTATION—FEDERAL AVIATION ADMINISTRATION

STANDARD AIRWORTHINESS CERTIFICATE copy

1. NATIONALITY AND REGISTRATION MARKS	2. MANUFACTURER AND MODEL	3. AIRCRAFT SERIAL NUMBER	4. CATEGORY
N2442H	Grumman G-73	[illegible]-13	Transport

5. AUTHORITY AND BASIS FOR ISSUANCE
This airworthiness certificate is issued pursuant to the Federal Aviation Act of 1958 and certifies that, as of the date of issuance, the aircraft to which issued has been inspected and found to conform to the type certificate therefor, to be in condition for safe operation, and has been shown to meet the requirements of the applicable comprehensive and detailed airworthiness code as provided by Annex 8 to the Convention on International Civil Aviation, except as noted herein.
Exceptions:

NONE

6. TERMS AND CONDITIONS
Unless sooner surrendered, suspended, revoked, or a termination date is otherwise established by the Administrator, this airworthiness certificate is effective as long as the maintenance, preventive maintenance, and alterations are performed in accordance with Parts 43, 43, and 91 of the Federal Aviation Regulations, as appropriate, and the aircraft is registered in the United States.

DATE OF ISSUANCE	FAA REPRESENTATIVE	DESIGNATION NUMBER
5-30-80	William L. Black	Miami EMDO-43 Ramey

Any alteration, reproduction, or misuse of this certificate may be punishable by a fine not exceeding $1,000, or imprisonment not exceeding 3 years, or both. THIS CERTIFICATE MUST BE DISPLAYED IN THE AIRCRAFT IN ACCORDANCE WITH APPLICABLE FEDERAL AVIATION REGULATIONS.

FAA Form 8100-2 (7-67) FORMERLY FAA FORM 1362 GPO 1967-O-270-921

FAA AIRCRAFT REGISTRY
CAMERA NO. 2 DATE: 6-23-83

DEPARTMENT OF TRANSPORTATION
FEDERAL AVIATION ADMINISTRATION

MAJOR REPAIR AND ALTERATION
(Airframe, Powerplant, Propeller, or Appliance)

Form Approved
Budget Bureau No. [illegible]

FOR FAA USE ONLY
OFFICE IDENTIFICATION
7-5-61

INSTRUCTIONS: Print or type all entries. See FAR 43.9, FAR 43 Appendix B, and AC 43.9-1 (or subsequent revision thereof) for instructions and disposition of this form.

1. AIRCRAFT	MAKE: Grumman	MODEL: G-73
	SERIAL NO.: J-13	NATIONALITY AND REGISTRATION MARK: N2442H
2. OWNER	NAME (As shown on registration certificate): Chalk's Intl.Airline, Inc.	ADDRESS (As shown on registration certificate): 837 City National Bank Miami, Florida 33130

3. FOR FAA USE ONLY

4. UNIT IDENTIFICATION / 5. TYPE

UNIT	MAKE	MODEL	SERIAL NO.	REPAIR	ALTERATION
AIRFRAME	(As described in item 1 above)				X
POWERPLANT					
PROPELLER					
APPLIANCE	TYPE / MANUFACTURER				

6. CONFORMITY STATEMENT

A. AGENCY'S NAME AND ADDRESS	B. KIND OF AGENCY	C. CERTIFICATE NO.
Claude Austin P.O.Box 2237 Christed, St. Croix 00840	X U.S. CERTIFICATED MECHANIC FOREIGN CERTIFICATED MECHANIC CERTIFICATED REPAIR STATION MANUFACTURER	2227109

I certify that the repair and/or alteration made to the unit(s) identified in item 4 above and described on the reverse or attachments hereto have been made in accordance with the requirements of Part 43 of the U.S. Federal Aviation Regulations and that the information furnished herein is true and correct to the best of my knowledge.

DATE	SIGNATURE OF AUTHORIZED INDIVIDUAL
March 26, 1980	Claude Austin *Claude Austin*

7. APPROVAL FOR RETURN TO SERVICE

Pursuant to the authority given persons specified below, the unit identified in item 4 was inspected in the manner prescribed by the Administrator of the Federal Aviation Administration and is [X] APPROVED [ ] REJECTED

BY							OTHER (Specify)
		FAA FLT. STANDARDS INSPECTOR		MANUFACTURER	X	INSPECTION AUTHORIZATION	
		FAA DESIGNEE		REPAIR STATION		CANADIAN DEPARTMENT OF TRANSPORT INSPECTOR OF AIRCRAFT	

DATE OF APPROVAL OR REJECTION	CERTIFICATE OR DESIGNATION NO.	SIGNATURE OF AUTHORIZED INDIVIDUAL
March 26, 1980	1617154	Charles R. Freehling *Charles R. Freehling*

FAA Form 337 (7-67) ☆ U.S. Government Printing Office 1977—772-646/141 (8320)

FAA AIRCRAFT REGISTRY
CAMERA NO. 2 DATE: 6-23-83

NOTICE

Weight and balance or operating limitation changes shall be entered in the appropriate aircraft record. An alteration must be compatible with all previous alterations to assure continued conformity with the applicable airworthiness requirements.

8. DESCRIPTION OF WORK ACCOMPLISHED *(If more space is required, attach additional sheets. Identify with aircraft nationality and registration mark and date work completed.)*

N2442H

1. In order to facilitate inspection of forward main wheel drag link attachment to hull an inspection access door has been provided as follows:

   a. One hole make on each side of the hull between hull stations 220. and 234 and 2 inches above the chine.

   b. One doublar of 2024T3 x .050 riveted on the inside of the hole, 7x6 inches, to restore skin strength at the location of the access hole. Double row of rivets used to hold doublar to skin.

   c. Gang-nut channel provides the attachment of water tight cover constructed in the same manner as water tight doors on floats and I/A/N figure 109-skin patch repair-square flush G-21A cover installed on sealant.

   d. All work done in accordance with Grumman structure and repair manual NAV.AER 01-85V-3, page 196, Figure 110 & AC 43.13.1, Chapter 2, Section 3.

NOTHING FOLLOWS

☐ ADDITIONAL SHEETS ARE ATTACHED

FAA AIRCRAFT REGISTRY
CAMERA NO. 5 DATE: 6-23-83

DEPARTMENT OF TRANSPORTATION
FEDERAL AVIATION ADMINISTRATION

Form Approved
Budget Bureau No. 04-R060.1

FOR FAA USE ONLY

OFFICE IDENTIFICATION
7-5-61

MAJOR REPAIR AND ALTERATION
(Airframe, Powerplant, Propeller, or Appliance)

INSTRUCTIONS. Print or type all entries. See FAR 43.9, FAR 43 Appendix B, and AC 43.9-1 (or subsequent revision thereof) for instructions and disposition of this form.

1. AIRCRAFT	MAKE: GRUMMAN	MODEL: G-73 MALLARD
	SERIAL NO.: J-13	NATIONALITY AND REGISTRATION MARK: N2442H
2. OWNER	NAME (As shown on registration certificate): CHALKS INTERNATIONAL AIRLINE, INC.	ADDRESS (As shown on registration certificate): 837 CITY NATIONAL BANK MIAMI, FLORIDA 33130

3. FOR FAA USE ONLY

4. UNIT IDENTIFICATION / 5. TYPE

UNIT	MAKE	MODEL	SERIAL NO.	REPAIR	ALTERATION
AIRFRAME	(As described in item 1 above)				
POWERPLANT	PRATT & WHITNEY	R-1340-S1H1	8142	X	
PROPELLER					
APPLIANCE	TYPE / MANUFACTURER				

6. CONFORMITY STATEMENT

A. AGENCY'S NAME AND ADDRESS	B. KIND OF AGENCY	C. CERTIFICATE NO.
ENGINE SUPPORT, INC. RT. 2 BOX 513 SEBRING AIR TERMINAL SEBRING, FLA. 33870	U.S. CERTIFICATED MECHANIC FOREIGN CERTIFICATED MECHANIC X CERTIFICATED REPAIR STATION MANUFACTURER	3610 POWER PLANT CLASS 1 & 2

D. I certify that the repair and/or alteration made to the unit(s) identified in item 4 above and described on the reverse or attachments hereto have been made in accordance with the requirements of Part 43 of the U.S. Federal Aviation Regulations and that the information furnished herein is true and correct to the best of my knowledge.

DATE: March 6, 1980

SIGNATURE OF AUTHORIZED INDIVIDUAL: JAMES W. TURNER James W. Turner

7. APPROVAL FOR RETURN TO SERVICE

Pursuant to the authority given persons specified below, the unit identified in item 4 was inspected in the manner prescribed by the Administrator of the Federal Aviation Administration and is: [X] APPROVED [ ] REJECTED

BY					
	FAA FLT. STANDARDS INSPECTOR	MANUFACTURER	INSPECTION AUTHORIZATION	OTHER (Specify)	
	FAA DESIGNEE	X REPAIR STATION	CANADIAN DEPARTMENT OF TRANSPORT INSPECTOR OF AIRCRAFT		

DATE OF APPROVAL OR REJECTION	CERTIFICATE OR DESIGNATION NO.	SIGNATURE OF AUTHORIZED INDIVIDUAL
March 6, 1980	3610	JAMES W. TURNER James W. Turner

FAA Form 337 (7-67) ☆ U.S. Government Printing Office 1977—772-646/141 (8320)

FAA AIRCRAFT REGISTRY
CAMERA NO. 2 DATE: 6-23-83

NOTICE

Weight and balance or operating limitation changes shall be entered in the appropriate aircraft record. An alteration must be compatible with all previous alterations to assure continued conformity with the applicable airworthiness requirements.

8. DESCRIPTION OF WORK ACCOMPLISHED *(If more space is required, attach additional sheets. Identify with aircraft nationality and registration mark and date work completed.)*

Engine received this station for overhaul. Engine given receiving inspection, completely disassembeld and all parts cleaned. All steel parts magnafluxed. All parts inspected in accordance with manufacturer's specifications and replaced where necessary. Engine, magnetos and harness completely overhauled. Test house run of engine satisfactory. Time since overhaul 00:00 hours.

FAA A.D. Note 56-6-2 complied with (Cylinder & Stud Inspection).
Service Bulletin 1758-B complied with (Fly weights & fly weight liners).
Service Bulletin 1658-B previously complied with (Converted from ball-plain blower).

Parts listings on file this station under WO#7205

☐ ADDITIONAL SHEETS ARE ATTACHED

FAA AIRCRAFT REGISTRY
CAMERA NO. 2 DATE: 6-23-83

DEPARTMENT OF TRANSPORTATION
FEDERAL AVIATION ADMINISTRATION

MAJOR REPAIR AND ALTERATION
(Airframe, Powerplant, Propeller, or Appliance)

Form Approved
Budget Bureau No. 04-R060.1

FOR FAA USE ONLY

OFFICE IDENTIFICATION
7-5-61

INSTRUCTIONS: Print or type all entries. See FAR 43.9, FAR 43 Appendix B, and AC 43.9-1 (or subsequent revision thereof) for instructions and disposition of this form.

1. AIRCRAFT	MAKE: GRUMMAN	MODEL: G-73 MALLARD
	SERIAL NO.: J-13	NATIONALITY AND REGISTRATION MARK: N2442H
2. OWNER	NAME (As shown on registration certificate): CHALKS INTERNATIONAL AIRLINE, INC.	ADDRESS (As shown on registration certificate): 857 CITY NATIONAL BANK MIAMI, FLORIDA 33130

3. FOR FAA USE ONLY

4. UNIT IDENTIFICATION / 5. TYPE

UNIT	MAKE	MODEL	SERIAL NO.	REPAIR	ALTERATION
AIRFRAME	(As described in item 1 above)				
POWERPLANT	PRATT & WHITNEY	R-1340-S1H1	8142	X	
PROPELLER					
APPLIANCE	TYPE / MANUFACTURER				

6. CONFORMITY STATEMENT

A. AGENCY'S NAME AND ADDRESS	B. KIND OF AGENCY	C. CERTIFICATE NO.
ENGINE SUPPORT, INC. RT. 2 BOX 513 SEBRING AIR TERMINAL SEBRING, FLA. 33870	U.S. CERTIFICATED MECHANIC FOREIGN CERTIFICATED MECHANIC X CERTIFICATED REPAIR STATION MANUFACTURER	3610 POWER PLANT CLASS 1 & 2

D. I certify that the repair and/or alteration made to the unit(s) identified in item 4 above and described on the reverse or attachments hereto have been made in accordance with the requirements of Part 43 of the U.S. Federal Aviation Regulations and that the information furnished herein is true and correct to the best of my knowledge.

DATE	SIGNATURE OF AUTHORIZED INDIVIDUAL
March 6, 1980	JAMES W. TURNER James W. Turner

7. APPROVAL FOR RETURN TO SERVICE

Pursuant to the authority given persons specified below, the unit identified in item 4 was inspected in the manner prescribed by the Administrator of the Federal Aviation Administration and is [X] APPROVED [ ] REJECTED

BY						
	FAA FLT. STANDARDS INSPECTOR		MANUFACTURER		INSPECTION AUTHORIZATION	OTHER (Specify)
	FAA DESIGNEE	X	REPAIR STATION		CANADIAN DEPARTMENT OF TRANSPORT INSPECTOR OF AIRCRAFT	

DATE OF APPROVAL OR REJECTION	CERTIFICATE OR DESIGNATION NO.	SIGNATURE OF AUTHORIZED INDIVIDUAL
March 6, 1980	3610	JAMES W. TURNER James W. Turner

FAA AIRCRAFT REGISTRY
CAMERA NO. 2' DATE: 6-23-83

NOTICE

Weight and balance or operating limitation changes shall be entered in the appropriate aircraft record. An alteration must be compatible with all previous alterations to assure continued conformity with the applicable airworthiness requirements.

8. DESCRIPTION OF WORK ACCOMPLISHED *(If more space is required, attach additional sheets. Identify with aircraft nationality and registration mark and date work completed.)*

Engine received this station for overhaul. Engine given receiving inspection, completely disassembeld and all parts cleaned. All steel parts magnafluxed. All parts inspected in accordance with manufacturer's specifications and replaced where necessary. Engine, magnetos and harness completely overhauled. Test house run of engine satisfactory. Time since overhaul 00:00 hours.
FAA A.D. Note 56-6-2 complied with (Cylinder & Stud Inspection).
Service Bulletin 1758-B complied with (Fly weights & fly weight liners).
Service Bulletin 1658-B previously complied with (Converted from ball-plain blower).

Parts listings on file this station under WO#7205

[ ] ADDITIONAL SHEETS ARE ATTACHED

FAA AIRCRAFT REGISTRY
CAMERA NO. 2 DATE: 6-23-83

DEPARTMENT OF TRANSPORTATION
FEDERAL AVIATION ADMINISTRATION

MAJOR REPAIR AND ALTERATION
(Airframe, Powerplant, Propeller, or Appliance)

Form Approved
Budget Bureau No. 04-R060

FOR FAA USE ONLY
OFFICE IDENTIFICATION
7-5-61

INSTRUCTIONS: Print or type all entries. See FAR 43.9, FAR 43 Appendix B, and AC 43.9-1 (or subsequent revision thereof) for instructions and disposition of this form.

1. AIRCRAFT	MAKE: GRUMMAN	MODEL: G-73
	SERIAL NO.: J-13	NATIONALITY AND REGISTRATION MARK: N 2442H
2. OWNER	NAME (As shown on registration certificate): Chalk's International Airline, Inc.	ADDRESS (As shown on registration certificate): Watson Island - MacArthur Causeway Miami, Florida 33132

3. FOR FAA USE ONLY

4. UNIT IDENTIFICATION / 5. TYPE

UNIT	MAKE	MODEL	SERIAL NO.	REPAIR	ALTERATION
AIRFRAME	(As described in item 1 above)				X
POWERPLANT					
PROPELLER					
APPLIANCE	TYPE / MANUFACTURER				

6. CONFORMITY STATEMENT

A. AGENCY'S NAME AND ADDRESS	B. KIND OF AGENCY	C. CERTIFICATE NO.
Claude Austin P.O. Box 2237 Frederikstod, St. Croix, USVI 00840	X U.S. CERTIFICATED MECHANIC FOREIGN CERTIFICATED MECHANIC CERTIFICATED REPAIR STATION MANUFACTURER	2227109

D. I certify that the repair and/or alteration made to the unit(s) identified in item 4 above and described on the reverse or attachments hereto have been made in accordance with the requirements of Part 43 of the U.S. Federal Aviation Regulations and that the information furnished herein is true and correct to the best of my knowledge.

DATE	SIGNATURE OF AUTHORIZED INDIVIDUAL
December 24, 1979	Claude Austin *Claude Austin*

7. APPROVAL FOR RETURN TO SERVICE

Pursuant to the authority given persons specified below, the unit identified in item 4 was inspected in the manner prescribed by the Administrator of the Federal Aviation Administration and is: [X] APPROVED [ ] REJECTED

BY							
		FAA FLT. STANDARDS INSPECTOR		MANUFACTURER	X	INSPECTION AUTHORIZATION	OTHER (Specify)
		FAA DESIGNEE		REPAIR STATION		CANADIAN DEPARTMENT OF TRANSPORT INSPECTOR OF AIRCRAFT	

DATE OF APPROVAL OR REJECTION	CERTIFICATE OR DESIGNATION NO.	SIGNATURE OF AUTHORIZED INDIVIDUAL
December 24, 1979	1617154	Charles Freehling *Charles R Freehling*

FAA Form 337 (7-67) ☆ U.S. Government Printing Office 1977—772-646/141 (8220)

FAA AIRCRAFT REGISTRY
CAMERA NO. 2 DATE: 6-23-83

NOTICE

Weight and balance or operating limitation changes shall be entered in the appropriate aircraft record. An alteration must be compatible with all previous alterations to assure continued conformity with the applicable airworthiness requirements.

8. DESCRIPTION OF WORK ACCOMPLISHED *(If more space is required, attach additional sheets. Identify with aircraft nationality and registration mark and date work completed.)*

1. Removed from each engine Pesco Hydraulic which is obsolete

2. Installed on each engine to improve the reliability of the hydraulic system, Vickers Hydraulic Pump P/N PF9-2713-10-1E with adapter and drive in accordance with 337 approved for duplication dated September 24, 1979 on G-73 S/N J-28, N 2970 All work done in accordance with AC43.13-19, Chapter 10 and Chapter 14.

----------NOTHING FOLLOWS----------

☐ ADDITIONAL SHEETS ARE ATTACHED

FAA AIRCRAFT REGISTRY
CAMERA NO. 2 DATE: 6-23-83

DEPARTMENT OF TRANSPORTATION
FEDERAL AVIATION ADMINISTRATION

MAJOR REPAIR AND ALTERATION
(Airframe, Powerplant, Propeller, or Appliance)

Form Approved
Budget Bureau No. 04-R060.1

FOR FAA USE ONLY

OFFICE IDENTIFICATION
SO-FSDO-61

INSTRUCTIONS: Print or type all entries. See FAR 43.9, FAR 43 Appendix B, and AC 43.9-1 (or subsequent revision thereof) for instructions and disposition of this form.

1. AIRCRAFT	MAKE: GRUMMAN	MODEL: G-73
	SERIAL NO.: J-13	NATIONALITY AND REGISTRATION MARK: N 2442H
2. OWNER	NAME (As shown on registration certificate): Chalk's International Airline, Inc.	ADDRESS (As shown on registration certificate): Watson Island, MacArthur Causeway Miami, Florida 33132

3. FOR FAA USE ONLY

4. UNIT IDENTIFICATION				5. TYPE	
UNIT	MAKE	MODEL	SERIAL NO.	REPAIR	ALTERATION
AIRFRAME	(As described in item 1 above)			X	
POWERPLANT					
PROPELLER					
APPLIANCE	TYPE / MANUFACTURER				

6. CONFORMITY STATEMENT

A. AGENCY'S NAME AND ADDRESS	B. KIND OF AGENCY	C. CERTIFICATE NO.
Claude Austin P.O. Box 2237 Frederiksted, St. Croix, USVI 00840	X U.S. CERTIFICATED MECHANIC FOREIGN CERTIFICATED MECHANIC CERTIFICATED REPAIR STATION MANUFACTURER	2227109

D. I certify that the repair and/or alteration made to the unit(s) identified in item 4 above and described on the reverse or attachments hereto have been made in accordance with the requirements of Part 43 of the U.S. Federal Aviation Regulations and that the information furnished herein is true and correct to the best of my knowledge.

DATE	SIGNATURE OF AUTHORIZED INDIVIDUAL
November 16, 1979	Claude Austin Claude Austin

7. APPROVAL FOR RETURN TO SERVICE

Pursuant to the authority given persons specified below, the unit identified in item 4 was inspected in the manner prescribed by the Administrator of the Federal Aviation Administration and is [X] APPROVED [ ] REJECTED

BY						
	FAA FLT. STANDARDS INSPECTOR	MANUFACTURER	X	INSPECTION AUTHORIZATION	OTHER (Specify)
	FAA DESIGNEE	REPAIR STATION		CANADIAN DEPARTMENT OF TRANSPORT INSPECTOR OF AIRCRAFT	

DATE OF APPROVAL OR REJECTION	CERTIFICATE OR DESIGNATION NO.	SIGNATURE OF AUTHORIZED INDIVIDUAL
November 16, 1979	1617154	Charles Freehling

FAA Form 337 (7-67) ☆ U.S. Government Printing Office 1977—772-646/141 (8320)

FAA AIRCRAFT REGISTRY
CAMERA NO. 2 DATE: 6-23-83

NOTICE

Weight and balance or operating limitation changes shall be entered in the appropriate aircraft record. An alteration must be compatible with all previous alterations to assure continued conformity with the applicable airworthiness requirements.

8. DESCRIPTION OF WORK ACCOMPLISHED *(If more space is required, attach additional sheets. Identify with aircraft nationality and registration mark and date work completed.)*

Repair of Keel and Hull Skin

1. Removed Damaged Keel from station 375 to 428 and hull skin from station 384 to 428.

2. Installed new skin from station 384 to 428 from keel to chin Left and Right, new skin 2024 T3 .040 anodized in accordance with Grumman service manual section IV Figure 135 Skin #33. Splice at station 384 is .063 with edges up and 3 rows of 5/32 rivets each side.

3. Installed new keel from station 375 to 428, keel repair at station 428 same as figure 67 Nav. Aer. 01-85V-3, repair plate inside splice .090, 2024 T3 anodized.

4. Repaired bulkhead station 428 in accordance with figure 75 Nav. Aer. 01-85V-3 repair extends from keel to about 8" up on the bulkhead.

5. Repaired bottom skin Left and Right of anti-squat strut station 423 to station 431, in accordance with AC 43.13-1A Chapter 2, Section 3.

6. All work done in accordance with Grumman structure and repair manual Nav. Aer. 01-85V-3 and AC 43.13-1A Chapter 2, Section 3.

----------NOTHING FOLLOWS----------

☐ ADDITIONAL SHEETS ARE ATTACHED

FAA AIRCRAFT REGISTRY
CAMERA NO. 2 DATE: 6-23-83

DEPARTMENT OF TRANSPORTATION
FEDERAL AVIATION ADMINISTRATION

MAJOR REPAIR AND ALTERATION
(Airframe, Powerplant, Propeller, or Appliance)

Form Approved
Budget Bureau No. 04-R060.1

FOR FAA USE ONLY

OFFICE IDENTIFICATION
SO-FSDO-61

INSTRUCTIONS: Print or type all entries. See FAR 43.9, FAR 43 Appendix B, and AC 43.9-1 (or subsequent revision thereof) for instructions and disposition of this form.

1. AIRCRAFT	MAKE: GRUMMAN	MODEL: G-73
	SERIAL NO.: J-15	NATIONALITY AND REGISTRATION MARK: N 24421
2. OWNER	NAME (As shown on registration certificate): Chalk's International Airline, Inc.	ADDRESS (As shown on registration certificate): Watson Island, MacArthur Causeway Miami, Florida 33132

3. FOR FAA USE ONLY

4. UNIT IDENTIFICATION / 5. TYPE

UNIT	MAKE	MODEL	SERIAL NO.	REPAIR	ALTERATION
AIRFRAME	(As described in item 1 above)			X	
POWERPLANT					
PROPELLER					
APPLIANCE	TYPE / MANUFACTURER				

6. CONFORMITY STATEMENT

A. AGENCY'S NAME AND ADDRESS	B. KIND OF AGENCY	C. CERTIFICATE NO.
Everett Alexander Soars, Jr. 645 Greenwood St. Summit Hills, P.R. 00920	X U.S. CERTIFICATED MECHANIC FOREIGN CERTIFICATED MECHANIC CERTIFICATED REPAIR STATION MANUFACTURER	Pending

D. I certify that the repair and/or alteration made to the unit(s) identified in item 4 above and described on the reverse or attachments hereto have been made in accordance with the requirements of Part 43 of the U.S. Federal Aviation Regulations and that the information furnished herein is true and correct to the best of my knowledge.

DATE	SIGNATURE OF AUTHORIZED INDIVIDUAL
November 16, 1979	Everett A. Soars Everett A. Soars

7. APPROVAL FOR RETURN TO SERVICE

Pursuant to the authority given persons specified below, the unit identified in item 4 was inspected in the manner prescribed by the Administrator of the Federal Aviation Administration and is [X] APPROVED [ ] REJECTED

BY							
		FAA FLT. STANDARDS INSPECTOR		MANUFACTURER	X	INSPECTION AUTHORIZATION	OTHER (Specify)
		FAA DESIGNEE		REPAIR STATION		CANADIAN DEPARTMENT OF TRANSPORT INSPECTOR OF AIRCRAFT	

DATE OF APPROVAL OR REJECTION	CERTIFICATE OR DESIGNATION NO.	SIGNATURE OF AUTHORIZED INDIVIDUAL
November 16, 1979	1617154	Charles Freehling Charles Freehling

FAA Form 337 (7-67) ☆ U.S. Government Printing Office 1977—772-646/141 (8320)

A

FAA AIRCRAFT REGISTRY
CAMERA NO. 2 DATE: 6-23-83

NOTICE

Weight and balance or operating limitation changes shall be entered in the appropriate aircraft record. An alteration must be compatible with all previous alterations to assure continued conformity with the applicable airworthiness requirements.

8. DESCRIPTION OF WORK ACCOMPLISHED *(If more space is required, attach additional sheets. Identify with aircraft nationality and registration mark and date work completed.)*

Repair of Keel and Hull Skin

1. Removed damaged keel from station 93 to 170.

2. Installed new keel 93 to 170. Keel repair at station 170 same as figure 67 Nav. Aer. 01-85V-3, repair plate inside splice .125, 2024 T3 Anodized.

3. Hull bottom repair - flush type station 150 to 160 same as figure 64 Nav. Aer. 01-85V-3, splice plates on inside .063 with two rows rivets each side insertion skin plate .063, 2024 T3 Anodize, 9" up from center each side of keel.

4. All work done in accordance with Grumman structure and repair manual Nav. Aer. 01-85V-3 and AC 43.13-1A Chapter 2, Section 3.

----------NOTHING FOLLOWS----------

☐ ADDITIONAL SHEETS ARE ATTACHED

FAA AIRCRAFT REGISTRY
CAMERA NO. 2 DATE: 6-23-83

DEPARTMENT OF TRANSPORTATION
FEDERAL AVIATION ADMINISTRATION

Form Approved
Budget Bureau No. 04-R060.1

MAJOR REPAIR AND ALTERATION
(Airframe, Powerplant, Propeller, or Appliance)

FOR FAA USE ONLY
OFFICE IDENTIFICATION 7-3-05

INSTRUCTIONS: Print or type all entries. See FAR 43.9, FAR 43 Appendix B, and AC 43.9-1 (or subsequent revision thereof) for instructions and disposition of this form.

1. AIRCRAFT	MAKE: GRUMMAN	MODEL: G-73
	SERIAL NO.: J-13	NATIONALITY AND REGISTRATION MARK: N-2442H
2. OWNER	NAME (As shown on registration certificate): CHALK'S INTERNATIONAL AIRLINE, INCORPORATED	ADDRESS (As shown on registration certificate): WATSON ISLAND, MAC ARTHUR CSWY. MIAMI, FLORIDA 33132

3. FOR FAA USE ONLY

The data/information identified herein complies with the applicable airworthiness requirements and is approved only for the above described aircraft, subject to conformity inspection by a person authorized in FAR 43, section 43.7.

10/1/79 — Date
R. H. Jackson — Signature of FAA Inspector 7-3-05

4. UNIT IDENTIFICATION / 5. TYPE

UNIT	MAKE	MODEL	SERIAL NO.	REPAIR	ALTERATION
AIRFRAME	(As described in item 1 above)				X
POWERPLANT					
PROPELLER					
APPLIANCE	TYPE / MANUFACTURER				

6. CONFORMITY STATEMENT

A. AGENCY'S NAME AND ADDRESS	B. KIND OF AGENCY	C. CERTIFICATE NO.
CHALK'S INTERNATIONAL AIRLINE, INC. WATSON ISLAND, MAC ARTHUR CSWY. MIAMI, FLORIDA 33132	U.S. CERTIFICATED MECHANIC FOREIGN CERTIFICATED MECHANIC X CERTIFICATED REPAIR STATION MANUFACTURER	705-135

D. I certify that the repair and/or alteration made to the unit(s) identified in item 4 above and described on the reverse or attachments hereto have been made in accordance with the requirements of Part 43 of the U.S. Federal Aviation Regulations and that the information furnished herein is true and correct to the best of my knowledge.

DATE: October 1, 1979
SIGNATURE OF AUTHORIZED INDIVIDUAL: Raymond Olsen

7. APPROVAL FOR RETURN TO SERVICE

Pursuant to the authority given persons specified below, the unit identified in item 4 was inspected in the manner prescribed by the Administrator of the Federal Aviation Administration and is ☒ APPROVED ☐ REJECTED

BY					
	FAA FLT. STANDARDS INSPECTOR	MANUFACTURER	✓ INSPECTION AUTHORIZATION	OTHER (Specify)	
	FAA DESIGNEE	REPAIR STATION	CANADIAN DEPARTMENT OF TRANSPORT INSPECTOR OF AIRCRAFT		

DATE OF APPROVAL OR REJECTION	CERTIFICATE OR DESIGNATION NO.	SIGNATURE OF AUTHORIZED INDIVIDUAL
Oct 1, 1979	323525	R. H. Jackson

FAA Form 337 (7-67)

(8320)

FAA AIRCRAFT REGISTRY
CAMERA NO. 2 DATE: 6-23-83

NOTICE

Weight and balance or operating limitation changes shall be entered in the appropriate aircraft record. An alteration must be compatible with all previous alterations to assure continued conformity with the applicable airworthiness requirements.

8. DESCRIPTION OF WORK ACCOMPLISHED *(If more space is required, attach additional sheets. Identify with aircraft nationality and registration mark and date work completed.)*

Removed custom interior consisting of 3 place sofa and 6 chairs from aircraft.

Installed 13 passenger seats in accordance with Grumman Mallard G-73 track and seat installation drawing GA-3017 dated 13 December 1974. Installation was made in accordance with previously FAA approved 337 dated 18 December 1974 for Grumman G-73 N-176W, Serial J-19. Seats were FAA approved manufactured by Associated Equipment Company, Miami, Florida.

Installed 2 place coach seat in accordance with drawing AE2233 which has DER approval dated 11 December 1974 and previously installed in Grumman G-73 N-7306 which has FAA approval dated 12 May 1975.

Aircraft weighed and new weight and balance prepared.

All work accomplished in accordance with FAR 43.13.

☐ ADDITIONAL SHEETS ARE ATTACHED

★1975-G.P.O.-1703-M/673-200 175

FAA AIRCRAFT REGISTRY
CAMERA NO. 2 DATE: 6-23-83

ORC 15

Form Approved
Budget Bureau No. 04-R0058

DEPARTMENT OF TRANSPORTATION
FEDERAL AVIATION ADMINISTRATION

APPLICATION FOR AIRWORTHINESS CERTIFICATE

INSTRUCTIONS—Print or type. Do not write in shaded areas; these are for FAA use only. Submit original only to an authorized FAA Representative. If additional space is required, use an attachment. For special flight permits complete Sections II and VI or VII as applicable.

I. AIRCRAFT DESCRIPTION

1. REGISTRATION MARK	2. AIRCRAFT BUILDER'S NAME (make)	3. AIRCRAFT MODEL DESIGNATION	4. YR. MFG.	FAA CODING
N2442H	Grumman	G 73	1947	39518Ø2
5. AIRCRAFT SERIAL NO.	6. ENGINE BUILDER'S NAME (make)	7. ENGINE MODEL DESIGNATION		52Ø16
J13	Pratt & Whitney	R1340		
8. NUMBER OF ENGINES	9. PROPELLER BUILDER'S NAME (make)	10. PROPELLER MODEL DESIGNATION		11. AIRCRAFT IS
2	Hamilton Standard	23D40-51		NEW [ ] USED [X] IMPORT [ ]

II. CERTIFICATION REQUESTED

APPLICATION IS HEREBY MADE FOR: (Check applicable items)

A 1 [X] STANDARD AIRWORTHINESS CERT. (Indicate category) — NORMAL [ ] UTILITY [ ] ACROBATIC [X] TRANSPORT [ ] GLIDER [ ] BALLOON [ ]

B SPECIAL AIRWORTHINESS CERTIFICATE (Check appropriate items)

- 2 LIMITED
- 5 PROVISIONAL (Indicate class)
  - 1 CLASS I
  - 2 CLASS II
- 3 RESTRICTED (Indicate operation(s) to be conducted)
  - 1 AGRICULTURE & PEST CONTROL; 2 AERIAL SURVEYING; 3 AERIAL ADVERTISING
  - 4 FOREST (Wild life conservation); 5 PATROLLING; 6 WEATHER CONTROL
  - 0 OTHER (Specify)
- 4 EXPERIMENTAL (Indicate operation(s) to be conducted)
  - 1 RESEARCH AND DEVELOPMENT; 2 AMATEUR BUILT; 3 EXHIBITION
  - 4 RACING; 5 CREW TRAINING; 6 MKT. SURVEY
  - 0 TO SHOW COMPLIANCE WITH FAR
- 8 SPECIAL FLIGHT PERMIT (Indicate operation to be conducted then complete Section VI or VII as applicable on reverse side)
  - 1 FERRY FLIGHT FOR REPAIRS, ALTERATIONS, MAINTENANCE OR STORAGE
  - 2 EVACUATE FROM AREA OF IMPENDING DANGER
  - 3 OPERATION IN EXCESS OF MAX. CERTIFICATED TAKE-OFF WEIGHT
  - 4 DELIVERING OR EXPORT; 5 PRODUCTION FLIGHT TESTING

C 6 MULTIPLE AIRWORTHINESS CERTIFICATE (Check appropriate Restricted Operation and Standard or Limited as applicable above)

III. OWNER'S CERTIFICATION

A. REGISTERED OWNER (As shown on Certificate of Aircraft Registration) — IF DEALER, CHECK HERE [ ]

NAME: Sladeco, Inc.
ADDRESS: 4650 South Hampton, Dallas, Texas 75232

B. AIRCRAFT CERTIFICATION BASIS (Check applicable blocks and complete items as indicated)

AIRCRAFT SPECIFICATION OR TYPE CERTIFICATION DATA SHEET (Give No. and Revision No.): A-783, Rev. 7

AIRWORTHINESS DIRECTIVES (Check if all applicable AD's complied with and give latest AD No.): 67-31-07

AIRCRAFT LISTING (Give page No(s).):

SUPPLEMENTAL TYPE CERTIFICATE (List number of each STC incorporated): SA615EA, SA1351WE, SA1862SW

C. AIRCRAFT OPERATION AND MAINTENANCE RECORDS

CHECK IF RECORDS IN COMPLIANCE WITH FAR 91.173 [ ]

TOTAL AIRFRAME HOURS—Enter for used aircraft only: 5315.9

3 EXPERIMENTAL ONLY—Enter hours flown since last certificate issued or renewed

D. CERTIFICATION—I hereby certify that I am the owner (or his agent) of the aircraft described above; that the aircraft is registered with the Federal Aviation Administration in accordance with Section 501 of the Federal Aviation Act of 1958, and applicable Federal Aviation Regulations; and that the aircraft has been inspected and is airworthy and eligible for the airworthiness certificate requested.

DATE OF APPLICATION	NAME AND TITLE (Print or type)	SIGNATURE
March 5, 1979	D. W. Broadie, Agent	D W Broadie

IV. INSPECTION AGENCY VERIFICATION

A. THE AIRCRAFT DESCRIBED ABOVE HAS BEEN INSPECTED AND FOUND AIRWORTHY BY: (Complete this section only if FAR 21.183 (d) applies)

- 2 FAR PART 121 OR 127 CERTIFICATE HOLDER (Give Certificate No.)
- 3 CERTIFICATED MECHANIC (Give Certificate No.)
- 6 CERTIFICATED REPAIR STATION (Give Certificate No.)
- 5 AIRCRAFT MANUFACTURER (Give Name of Firm)

DATE	TITLE	SIGNATURE

V. FAA REPRESENTATIVE CERTIFICATION

(Check ALL applicable blocks) I find that the aircraft described in Section I or VII meets the requirements for: [ ] The certification requested, or [4] Amendment or modification of its current airworthiness certificate. Inspection for a special flight permit under Section VII was conducted by: [ ] FAA Inspector; certificate holder under [ ] FAR 65, [ ] FAR 121 or 127, or [ ] FAR 145.

DATE	DISTRICT OFFICE	DESIGNEE'S SIGNATURE AND NO.	FAA INSPECTOR'S SIGNATURE
3-8-79	SW-SADO-4		J. T. Hamilton

FAA Form 8130-6 (7-70)

FAA AIRCRAFT REGISTRY
CAMERA NO. 2 DATE: 6-23-83

VI. PRODUCTION FLIGHT TESTING

A. MANUFACTURER

NAME	ADDRESS

B. PRODUCTION BASIS *(Check applicable item)*

- [ ] PRODUCTION CERTIFICATE *(Give production certificate number)*
- [ ] TYPE CERTIFICATE ONLY
- [ ] APPROVED PRODUCTION INSPECTION SYSTEM

C. GIVE QUANTITY OF CERTIFICATES REQUIRED FOR OPERATING NEEDS:

DATE OF APPLICATION	NAME AND TITLE *(Print or type)*	SIGNATURE

VII. SPECIAL FLIGHT PERMIT PURPOSES OTHER THAN PRODUCTION FLIGHT TEST

A. DESCRIPTION OF AIRCRAFT

REGISTERED OWNER	ADDRESS
BUILDER *(Make)*	MODEL
SERIAL NUMBER	REGISTRATION MARK

B. DESCRIPTION OF FLIGHT

FROM	TO	
VIA	DEPARTURE DATE	DURATION

C. CREW REQUIRED TO OPERATE THE AIRCRAFT AND ITS EQUIPMENT

- [ ] PILOT
- [ ] CO-PILOT
- [ ] NAVIGATOR
- [ ] OTHER *(Specify)*

D. THE AIRCRAFT DOES NOT MEET THE APPLICABLE AIRWORTHINESS REQUIREMENTS AS FOLLOWS:

E. THE FOLLOWING RESTRICTIONS ARE CONSIDERED NECESSARY FOR SAFE OPERATION *(Use attachment if necessary)*

F. CERTIFICATION—I hereby certify that I am the registered owner (or his agent) of the aircraft described above; that the aircraft is registered with the Federal Aviation Administration in accordance with Section 501 of the Federal Aviation Act of 1958, and applicable Federal Aviation Regulations; and that the aircraft has been inspected and is airworthy for the flight described.

DATE	NAME AND TITLE *(Print or type)*	SIGNATURE

VIII. AIRWORTHINESS DOCUMENTATION (FAA use only)

- [ ] A. Operating Limitations and Markings in Compliance with FAR 91.31 as Applicable
- [ ] B. Current Operating Limitations Attached
- [ ] C. Data, Drawings, Photographs, etc. *(Attach when required)*
- [ ] D. Current Weight and Balance Information Available in Aircraft
- [ ] E. Major Repair and Alteration, FAA 337 *(Attach when required)*
- [ ] F. This Inspection Recorded in Aircraft Records
- [ ] G. Statement of Conformity, FAA Form 317 *(Attach when required)*
- [ ] H. Foreign Airworthiness Certification for Import Aircraft *(Attach when required)*
- [ ] I. Previous Airworthiness Certificate Issued in Accordance with FAR _____ CAR _____ *(Original attached)*
- [ ] J. Current Airworthiness Certificate Issued in Accordance with FAR _____ *(Copy attached)*

☆ U.S. GOVERNMENT PRINTING OFFICE: 1977 - 772-386/105/7

Typed by # 8

~~Typed by # 20~~

FAA AIRCRAFT REGISTRY
CAMERA NO. 2 DATE: 6-23-83

UNITED STATES OF AMERICA
DEPARTMENT OF TRANSPORTATION—FEDERAL AVIATION ADMINISTRATION

STANDARD AIRWORTHINESS CERTIFICATE

1. NATIONALITY AND REGISTRATION MARKS	2. MANUFACTURER AND MODEL	3. AIRCRAFT SERIAL NUMBER	4. CATEGORY
N2442H	Grumman G-73	113	Transport

5. AUTHORITY AND BASIS FOR ISSUANCE
This airworthiness certificate is issued pursuant to the Federal Aviation Act of 1958 and certifies that, as of the date of issuance, the aircraft to which issued has been inspected and found to conform to the type certificate therefor, to be in condition for safe operation, and has been shown to meet the requirements of the applicable comprehensive and detailed airworthiness code, as provided by Annex 8 to the Convention on International Civil Aviation, except as noted herein.
Exceptions: None

6. TERMS AND CONDITIONS
Unless sooner surrendered, suspended, revoked, or a termination date is otherwise established by the Administrator, this airworthiness certificate is effective as long as the maintenance, preventative maintenance, and alterations are performed in accordance with Parts 21, 43, and 91 of the Federal Aviation Regulations, as appropriate, and the aircraft is registered in the United States.

DATE OF ISSUANCE	FAA REPRESENTATIVE	DESIGNATION NUMBER
3-08-79	J. T. HAMILTON	FTW GADO 2-0-04

Any alteration, reproduction, or misuse of this certificate may be punishable by a fine not exceeding $1,000, or imprisonment not exceeding 3 years, or both. THIS CERTIFICATE MUST BE DISPLAYED IN THE AIRCRAFT IN ACCORDANCE WITH APPLICABLE FEDERAL AVIATION REGULATIONS.

FAA Form 8100-2 (7-67) FORMERLY FAA FORM 1362

U.S. Government Printing Office — 1976-675-326

FAA AIRCRAFT REGISTRY
CAMERA NO. 2 DATE: 6-23-83

FAA AIRCRAFT REGISTRY
CAMERA NO. 2 DATE: 6-23-83

Form Approved
Budget Bureau No. 04-R0058

DEPARTMENT OF TRANSPORTATION
FEDERAL AVIATION ADMINISTRATION

APPLICATION FOR AIRWORTHINESS CERTIFICATE

INSTRUCTIONS—Print or type. Do not write in shaded areas; these are for FAA use only. Submit original only to an authorized FAA Representative. If additional space is required, use an attachment. For special flight permits complete Sections II and VI or VII as applicable.

I. AIRCRAFT DESCRIPTION

1. REGISTRATION MARK: N2442H	2. AIRCRAFT BUILDER'S NAME (make): Grumman	3. AIRCRAFT MODEL DESIGNATION: G-73	4. YR. MFG.: 1947
5. AIRCRAFT SERIAL NO.: J13	6. ENGINE BUILDER'S NAME (make): P & W	7. ENGINE MODEL DESIGNATION: R-1340-51 MI	FAA CODING: 3751822 / 52016
8. NUMBER OF ENGINES: 2	9. PROPELLER BUILDER'S NAME (make): Hamilton Standard	10. PROPELLER MODEL DESIGNATION: 23D40	11. AIRCRAFT IS: ~~NEW~~ ~~USED~~ IMPORT

II. CERTIFICATION REQUESTED

APPLICATION IS HEREBY MADE FOR: (Check applicable items)

A 1 STANDARD AIRWORTHINESS CERT. (Indicate category) NORMAL | UTILITY | ACROBATIC | TRANSPORT | GLIDER | BALLOON

B [X] SPECIAL AIRWORTHINESS CERTIFICATE (Check appropriate items)

- 2 LIMITED
- 5 PROVISIONAL (Indicate class): 1 CLASS I; 2 CLASS II
- 3 RESTRICTED (Indicate operation(s) to be conducted): 1 AGRICULTURE & PEST CONTROL; 2 AERIAL SURVEYING; 3 AERIAL ADVERTISING; 4 FOREST (Wild life conservation); 5 PATROLLING; 6 WEATHER CONTROL; 0 OTHER (Specify)
- 4 [X] EXPERIMENTAL (Indicate operation(s) to be conducted): 1 RESEARCH AND DEVELOPMENT; 2 AMATEUR BUILT; 3 EXHIBITION; 4 RACING; 5 [X] CREW TRAINING; 6 MKT. SURVEY; 0 [X] TO SHOW COMPLIANCE WITH FAR
- 8 SPECIAL FLIGHT PERMIT (Indicate operation to be conducted then complete Section VI or VII as applicable on reverse side): 1 FERRY FLIGHT FOR REPAIRS, ALTERATIONS, MAINTENANCE OR STORAGE; 2 EVACUATE FROM AREA OF IMPENDING DANGER; 3 OPERATION IN EXCESS OF MAX. CERTIFICATED TAKE-OFF WEIGHT; 4 DELIVERING OR EXPORT; 5 PRODUCTION FLIGHT TESTING

C 6 MULTIPLE AIRWORTHINESS CERTIFICATE (Check appropriate Restricted Operation and Standard or Limited as applicable above)

III. OWNER'S CERTIFICATION

A. REGISTERED OWNER (As shown on Certificate of Aircraft Registration) IF DEALER, CHECK HERE →

NAME: Crow, Inc.
ADDRESS: P. O. Box 102, Swanton, Ohio 43558

B. AIRCRAFT CERTIFICATION BASIS (Check applicable blocks and complete items as indicated)

AIRCRAFT SPECIFICATION OR TYPE CERTIFICATION DATA SHEET (Give No. and Revision No.): NA
AIRWORTHINESS DIRECTIVES (Check if all applicable AD's complied with and give latest AD No.): NA
AIRCRAFT LISTING (Give page No(s).): NA
SUPPLEMENTAL TYPE CERTIFICATE (List number of each STC incorporated): NA

C. AIRCRAFT OPERATION AND MAINTENANCE RECORDS

X CHECK IF RECORDS IN COMPLIANCE WITH FAR 91.173
TOTAL AIRFRAME HOURS—~~Enter for used aircraft only~~: 5023
3 EXPERIMENTAL ONLY—Enter hours flown since last certificate issued or renewed: NA

D. CERTIFICATION—I hereby certify that I am the owner (or his agent) of the aircraft described above; that the aircraft is registered with the Federal Aviation Administration in accordance with Section 501 of the Federal Aviation Act of 1958, and applicable Federal Aviation Regulations; and that the aircraft has been inspected and is airworthy and eligible for the airworthiness certificate requested.

DATE OF APPLICATION	NAME AND TITLE (Print or type)	SIGNATURE
8/9/73	L. E. Barnum, Owner	Leon E. Barnum

IV. INSPECTION AGENCY VERIFICATION

A. THE AIRCRAFT DESCRIBED ABOVE HAS BEEN INSPECTED AND FOUND AIRWORTHY BY: (Complete this section only if FAR 21.183 (d) applies)

2 FAR PART 121 OR 127 CERTIFICATE HOLDER (Give Certificate No.)
3 CERTIFICATED MECHANIC (Give Certificate No.)
6 CERTIFICATED REPAIR STATION (Give Certificate No.)
5 AIRCRAFT MANUFACTURER (Give Name of Firm)

DATE	TITLE	SIGNATURE

V. FAA REPRESENTATIVE CERTIFICATION

(Check ALL applicable blocks) I find that the aircraft described in Section I or VII meets the requirements for: [X] The certification requested, or [4] Amendment or modification of its current airworthiness certificate. Inspection for a special flight permit under Section VII was conducted by: [ ] FAA Inspector; certificate holder under [ ] FAR 65, [ ] FAR 121 or 127, or [ ] FAR 145.

DATE	DISTRICT OFFICE	DESIGNEE'S SIGNATURE AND NO.	FAA INSPECTOR'S SIGNATURE
8/9/73	GL-EMDO-C-0-48		John C. Curtice

FAA Form 8130-6 (7-70)

FAA AIRCRAFT REGISTRY
CAMERA NO. 2 DATE: 6-23-83

VI. PRODUCTION FLIGHT TESTING

A. MANUFACTURER

NAME	ADDRESS

B. PRODUCTION BASIS *(Check applicable item)*

- [ ] PRODUCTION CERTIFICATE *(Give production certificate number)*
- [ ] TYPE CERTIFICATE ONLY
- [ ] APPROVED PRODUCTION INSPECTION SYSTEM

C. GIVE QUANTITY OF CERTIFICATES REQUIRED FOR OPERATING NEEDS:

DATE OF APPLICATION	NAME AND TITLE *(Print or type)*	SIGNATURE

VII. SPECIAL FLIGHT PERMIT PURPOSES OTHER THAN PRODUCTION FLIGHT TEST

A. DESCRIPTION OF AIRCRAFT

REGISTERED OWNER	ADDRESS
BUILDER *(Make)*	MODEL
SERIAL NUMBER	REGISTRATION MARK

B. DESCRIPTION OF FLIGHT

FROM	TO	
VIA	DEPARTURE DATE	DURATION

C. CREW REQUIRED TO OPERATE THE AIRCRAFT AND ITS EQUIPMENT

- [ ] PILOT
- [ ] CO-PILOT
- [ ] NAVIGATOR
- [ ] OTHER *(Specify)*

D. THE AIRCRAFT DOES NOT MEET THE APPLICABLE AIRWORTHINESS REQUIREMENTS AS FOLLOWS:

RECEIVED AUG 22 73 ENGINEERING AND MANUFACTURING BRANCH

E. THE FOLLOWING RESTRICTIONS ARE CONSIDERED NECESSARY FOR SAFE OPERATION *(Use attachment if necessary)*

F. **CERTIFICATION**—I hereby certify that I am the registered owner (or his agent) of the aircraft described above; that the aircraft is registered with the Federal Aviation Administration in accordance with Section 501 of the Federal Aviation Act of 1958, and applicable Federal Aviation Regulations; and that the aircraft has been inspected and is airworthy for the flight described.

DATE	NAME AND TITLE *(Print or type)*	SIGNATURE

VIII. AIRWORTHINESS DOCUMENTATION (FAA use only)

- [X] A. Operating Limitations and Markings in Compliance with FAR 91.31 as Applicable
- [X] B. Current Operating Limitations Attached
- [ ] C. Data, Drawings, Photographs, etc. *(Attach when required)*
- [X] D. Current Weight and Balance Information Available in Aircraft
- [ ] E. Major Repair and Alteration, FAA 337 *(Attach when required)*
- [X] F. This Inspection Recorded in Aircraft Records
- [ ] G. Statement of Conformity, FAA Form 317 *(Attach when required)*
- [ ] H. Foreign Airworthiness Certification for Import Aircraft *(Attach when required)*
- [ ] I. Previous Airworthiness Certificate Issued in Accordance with FAR _____ CAR NA *(Original attached)*
- [ ] J. Current Airworthiness Certificate Issued in Accordance with FAR 21.191 (b)(c) *(Copy attached)*

FAA AIRCRAFT REGISTRY
CAMERA NO. 2 DATE: 6-23-83

UNITED STATES OF AMERICA
DEPARTMENT OF TRANSPORTATION — FEDERAL AVIATION ADMINISTRATION

SPECIAL AIRWORTHINESS CERTIFICATE

A	CLASSIFICATION: Experimental		
	PURPOSE: Show compliance with FAR and crew training		
B	MANUFACTURER	NAME NA	
		ADDRESS NA	
C	FLIGHT	FROM NA	
		TO NA	
D	N-2447H		SERIAL NO. J13
	BUILDER Grumman		MODEL G-73
E	DATE OF ISSUANCE August 9, 1973		EXPIRY Sept. 30, 1973
	OPERATING LIMITATIONS DATED 8/9/73		ARE A PART OF THIS CERTIFICATE
	SIGNATURE OF FAA REPRESENTATIVE John C. Curtice		DESIGNATION OR OFFICE NO. GL-ADO-C-0-48

Any alteration, reproduction, or misuse of this certificate may be punishable by a fine not exceeding $1,000 or imprisonment not exceeding 3 years, or both. THIS CERTIFICATE MUST BE DISPLAYED IN THE AIRCRAFT IN ACCORDANCE WITH APPLICABLE FEDERAL AVIATION REGULATIONS.

FAA FORM 8130-7 (3-69) SUPERSEDES FAA FORMS 1362-8; 8100-3; 8130-8 SEE REVERSE SIDE

FAA AIRCRAFT REGISTRY
CAMERA NO. 2 DATE: 6-23-83

A	This airworthiness certificate is issued under the authority of the Federal Aviation Act of 1958 and the Federal Aviation Regulations (FAR).
B	This airworthiness certificate authorizes the manufacturer named on the reverse side to conduct production flight tests, and only production flight tests, of aircraft registered in his name. No person may conduct production flight tests under this certificate: (1) Carrying persons or property for compensation or hire; and/or (2) Carrying persons not essential to the purpose of the flight.
C	This airworthiness certificate authorizes the flight specified on the reverse side for the purpose shown in Block A.
D	This airworthiness certificate certifies that, as of the date of issuance, the aircraft to which issued has been inspected and found to meet the requirements of the applicable FAR. The aircraft does not meet the requirements of the applicable comprehensive and detailed airworthiness code as provided by Annex 8 to the Convention On International Civil Aviation. No person may operate the aircraft described on the reverse side: (1) except in accordance with the applicable FAR and in accordance with conditions and limitations which may be prescribed by the Administrator as part of this certificate; (2) over any foreign country without the special permission of that country.
E	Unless sooner surrendered, suspended, or revoked, this airworthiness certificate is effective for the duration and under the conditions prescribed in FAR Part 21, Section 21.181 or 21.217.

Engineering & Mfg. District Office 48
Room 214, Terminal Building
Dayton Municipal Airport
Vandalia, Ohio 45377

August 9, 1973

OPERATING LIMITATIONS

AIRCRAFT MAKE: Grumman
AIRCRAFT MODEL: G-73

REGISTRATION MARKS: N2442H
SERIAL NUMBER: J13

1. No person may operate this aircraft for other than the purpose for which the special purpose airworthiness certificate was issued and the aircraft shall be operated in accordance with the applicable FAA Air Traffic and General Operating Rules.

2. All flights shall be conducted within the geographical area described as follows:

   After takeoff from Toledo Express Airport, fly most direct route to Maumee river, following the river to the SW end of Lake Erie for conducting flight test operations and return by same route.

   Remain in flight test area for 10 Hours or until the airworthy and flight characteristics are determined to be in conformance with the applicable FAR's.

   After aforementioned airworthy characteristics have been determined satisfactory, training flights may be conducted within a 100-mile radius of Toledo Express Airport.

3. No operations, including takeoffs and landings, shall be conducted over densely populated areas or in congested airways, except those takeoffs and landings authorized as follows: Toledo Express Airport.

4. Operator of this aircraft shall notify the control tower of the experimental nature of this aircraft when operating it into or out of airports with operating control towers. (For jet and high performance piston-powered aircraft, to advise tower of minimum runway requirements.)

5. Unless appropriately equipped for night and/or instrument flight in accordance with FAR 91.33, this aircraft must be operated Day VFR only.

6. This aircraft shall contain the placards, listings and instrument markings required by FAR 91.31.

7. No person may operate this aircraft for carrying persons or property for compensation or hire.

8. No person may be carried in the aircraft during flight unless that person is essential to the purpose of the flight.

9. The person operating this aircraft shall advise each person carried of the experimental nature of this aircraft.

10. Any major change to this aircraft, as defined by FAR 21.93, invalidates the special airworthiness certificate issued for this aircraft.

11. This aircraft does not comply with the Airworthiness Standards of ICAO Annex, Part II; therefore, flights are not authorized over foreign countries. Special permission must be obtained from foreign countries to conduct flights over their territories.

John C. Curtice

JOHN C. CURTICE
Manufacturing Inspector
GL-EMDO-48

cc:
AC-253

FAA AIRCRAFT REGISTRY
CAMERA NO. 2 DATE: 6-23-83

DEPARTMENT OF TRANSPORTATION
FEDERAL AVIATION ADMINISTRATION

MAJOR REPAIR AND ALTERATION
(Airframe, Powerplant, Propeller, or Appliance)

Form Approved
Budget Bureau No. 04-R060.1

FOR FAA USE ONLY
OFFICE IDENTIFICATION NW - GADC
2-0-04

INSTRUCTIONS: Print or type all entries. See FAR 43.9, FAR 43 Appendix B, and AC 43.9-1 (or subsequent revision thereof) for instructions and disposition of this form.

1. AIRCRAFT	MAKE: Grumman	MODEL: G-73
	SERIAL NO.: J-13	NATIONALITY AND REGISTRATION MARK: N 2442H
2. OWNER	NAME (As shown on registration certificate): Sladeco, Inc.	ADDRESS (As shown on registration certificate): 4650 S. Hampton, Dallas, TX 75232

3. FOR FAA USE ONLY

4. UNIT IDENTIFICATION / 5. TYPE

UNIT	MAKE	MODEL	SERIAL NO.	5. TYPE: REPAIR	5. TYPE: ALTERATION
AIRFRAME	(As described in item 1 above)				X
POWERPLANT					
PROPELLER					
APPLIANCE	TYPE / MANUFACTURER				

6. CONFORMITY STATEMENT

A. AGENCY'S NAME AND ADDRESS	B. KIND OF AGENCY	C. CERTIFICATE NO.
Broadie's Aircraft & Eng. Serv., Inc Location 2N Meacham Field, Fort Worth, TX 76106 D. W. Broadie	X U.S. CERTIFICATED MECHANIC FOREIGN CERTIFICATED MECHANIC CERTIFICATED REPAIR STATION MANUFACTURER	A&P 229631

D. I certify that the repair and/or alteration made to the unit(s) identified in item 4 above and described on the reverse or attachments hereto have been made in accordance with the requirements of Part 43 of the U.S. Federal Aviation Regulations and that the information furnished herein is true and correct to the best of my knowledge.

DATE	SIGNATURE OF AUTHORIZED INDIVIDUAL
March 3, 1979	D.W.Broadie D. W. Broadie

7. APPROVAL FOR RETURN TO SERVICE

Pursuant to the authority given persons specified below, the unit identified in item 4 was inspected in the manner prescribed by the Administrator of the Federal Aviation Administration and is [X] APPROVED [ ] REJECTED

BY					
	FAA FLT. STANDARDS INSPECTOR	MANUFACTURER	X	INSPECTION AUTHORIZATION	OTHER (Specify)
	FAA DESIGNEE	REPAIR STATION		CANADIAN DEPARTMENT OF TRANSPORT INSPECTOR OF AIRCRAFT	

DATE OF APPROVAL OR REJECTION	CERTIFICATE OR DESIGNATION NO.	SIGNATURE OF AUTHORIZED INDIVIDUAL
3-3-79	229631	D.W.Broadie D. W. Broadie

FAA Form 337 (7-67)

(8320)

FAA AIRCRAFT REGISTRY
CAMERA NO. 2 DATE: 6-23-83

NOTICE

Weight and balance or operating limitation changes shall be entered in the appropriate aircraft record. An alteration must be compatible with all previous alterations to assure continued conformity with the applicable airworthiness requirements.

8. DESCRIPTION OF WORK ACCOMPLISHED *(If more space is required, attach additional sheets. Identify with aircraft nationality and registration mark and date work completed.)*

Installed Alternate nose wheel according to Frakes Aviation Drawing FA5096, Revision D Dated 6-21-74, as per STC SA1862SW.

The End

0-1	C		APS-1	M-1
0-2				M-2
0-3	RECEIVED			M-3
0-4	MAR 19 1979			M-4
0-5	FAA-SW-GADO-4 FTW			
0-6	C-1	C-2	C-3	E-1
0-7	C-4	C-5	C-6	

☐ ADDITIONAL SHEETS ARE ATTACHED

U.S. GOVERNMENT PRINTING OFFICE : 1967 O—272-085

FAA AIRCRAFT REGISTRY
CAMERA NO. 2 DATE: 6-23-83

FAA

DEPARTMENT OF TRANSPORTATION
FEDERAL AVIATION ADMINISTRATION

MAJOR REPAIR AND ALTERATION
(Airframe, Powerplant, Propeller, or Appliance)

Form Approved
Budget Bureau No. 04-R060.1

FOR FAA USE ONLY
OFFICE IDENTIFICATION W - GADO
2-0-04

INSTRUCTIONS: Print or type all entries. See FAR 43.9, FAR 43 Appendix B, and AC 43.9-1 (or subsequent revision thereof) for instructions and disposition of this form.

1. AIRCRAFT	MAKE: Grumman	MODEL: G-73
	SERIAL NO.: J-13	NATIONALITY AND REGISTRATION MARK: N2442H
2. OWNER	NAME (As shown on registration certificate): Dr. Reginald H. Slade	ADDRESS (As shown on registration certificate): 4650 S. Hampton NO. 103, Dallas, Tx. 75232

3. FOR FAA USE ONLY

4. UNIT IDENTIFICATION

UNIT	MAKE	MODEL	SERIAL NO.	5. TYPE: REPAIR	ALTERATION
AIRFRAME	(As described in item 1 above)				XX
POWERPLANT					
PROPELLER					
APPLIANCE	TYPE / MANUFACTURER				

6. CONFORMITY STATEMENT

A. AGENCY'S NAME AND ADDRESS	B. KIND OF AGENCY	C. CERTIFICATE NO.
Air Carrier Electronics, Inc. Meacham Field Loc. 180 Ft. Worth, Texas 76106	U.S. CERTIFICATED MECHANIC FOREIGN CERTIFICATED MECHANIC X CERTIFICATED REPAIR STATION MANUFACTURER	4337

D. I certify that the repair and/or alteration made to the unit(s) identified in item 4 above and described on the reverse or attachments hereto have been made in accordance with the requirements of Part 43 of the U.S. Federal Aviation Regulations and that the information furnished herein is true and correct to the best of my knowledge.

DATE	SIGNATURE OF AUTHORIZED INDIVIDUAL
Feb 14, 1979	Gerald F. Heffley, Chief Inspector

7. APPROVAL FOR RETURN TO SERVICE

Pursuant to the authority given persons specified below, the unit identified in item 4 was inspected in the manner prescribed by the Administrator of the Federal Aviation Administration and is [X] APPROVED [ ] REJECTED

BY								
		FAA FLT. STANDARDS INSPECTOR		MANUFACTURER		INSPECTION AUTHORIZATION	OTHER (Specify)
		FAA DESIGNEE	X	REPAIR STATION		CANADIAN DEPARTMENT OF TRANSPORT INSPECTOR OF AIRCRAFT	

DATE OF APPROVAL OR REJECTION	CERTIFICATE OR DESIGNATION NO.	SIGNATURE OF AUTHORIZED INDIVIDUAL
Feb 14, 1979	4337	Gerald F. Heffley, Chief Inspector

FAA Form 337 (7-67) ☆ U.S. Government Printing Office 1977—772-646/141 (8320)

FAA AIRCRAFT REGISTRY
CAMERA NO. 2 DATE: 6-23-83

☐ ADDITIONAL SHEETS ARE ATTACHED

1. Removed ARC RT-11A VHF transceiver with DV-15A dynaverter and Gables VC series control head; R-30 ADF receiver with L-11 loop antenna, DV-14A dynaverter, and IN131A-1 indicator.

2, InstalledKing KX-175B VHF nav/com, KI-209 VOR/LOC/GS converter-indicator, KA-39 power adapter, KR-85 ADF tuner with KI-225-01 indicator, KA-42B combination loop/sense antenna, KN-65A DME with KI-266 indicator, KXP-755 transponder with KFS-570B control head, two KA-53 L band antennas (DME and transponder), KMR-675 marker receiver with KA-35 light assembly, KN-75 glide-slope receiver, AIM 400C slaved gyro system(DG) with AIM 254-11 flux detector, ID-250A RMI indicator, EICOR 100VA inverter, Narco VCA-1 VHF broad-band antenna, and FT-25 audio/isolationa amplifier.

3. The KX-175B, KI-209, KR-85, KI-225-01, KI-266, KFS-570B, ID-250A, AIM 400C and KA-35 were all installed in standard cut-outs in the instrument panel; the KA-39, EICOR inverter and FT-25 were mounted on an existing shelf in the nose compartment; the KA-42B was mounted atop the fusalage in a beefed-up area; the KN-65A, KXP-755 and KN-75 were mounted on a shelf in tail area aft of rear baggage compartment bulkhead; the two KA-53 antennas was mounted on belly aft of rear baggage compartment, theVCA-1 antenna was mounted atop the fusalage, and the 254-11 flux-detector was mounted in tail area aft of rear baggage compartment. All units were installed in accordance with FAA manuals AC 43.13-1, AC 43.13-2 and manufacturer's instructions.

4. The magnetic compass was checked weith engines running and all radios on and recalibrated as necessary.

5. An electrical load analysis was made and it was determined that the maximum probable continous load was 46.4 amps which does not exceed the output of one of the two 100 amp generators installed.

0-1	C		APS-1	M-1
0-2				M-2
0-3	RECEIVED			M-3
0-4	FEB 16 1979			M-4
0-5	FAA-SW-GADO-4 FTW			
0-6	C-1	C-2	C-3	
0-7	C-4	C-5	C-6	

8. DESCRIPTION OF WORK ACCOMPLISHED (If more space is required, attach additional sheets. Identify with aircraft nationality and registration mark and date work completed.)

NOTICE

Weight and balance or operating limitation changes shall be entered in the appropriate aircraft record. An alteration must be compatible with all previous alterations to assure continued conformity with the applicable airworthiness requirements.

FAA AIRCRAFT REGISTRY
CAMERA NO. 2 DATE: 6-23-83

FAA

DEPARTMENT OF TRANSPORTATION
FEDERAL AVIATION ADMINISTRATION

MAJOR REPAIR AND ALTERATION
(Airframe, Powerplant, Propeller, or Appliance)

Form Approved
Budget Bureau No. 04-R060.1

FOR FAA USE ONLY
OFFICE IDENTIFICATION NW - GADC
2-0-04

INSTRUCTIONS: Print or type all entries. See FAR 43.9, FAR 43 Appendix B, and AC 43.9-1 (or subsequent revision thereof) for instructions and disposition of this form.

1. AIRCRAFT	MAKE: Grumman	MODEL: G-73
	SERIAL NO.: J-13	NATIONALITY AND REGISTRATION MARK: N2442H
2. OWNER	NAME (As shown on registration certificate): Dr. Reginald Slade	ADDRESS (As shown on registration certificate): 4650 S. Hampton No. 103, Dallas, Tx. 75232

3. FOR FAA USE ONLY

4. UNIT IDENTIFICATION / 5. TYPE

UNIT	MAKE	MODEL	SERIAL NO.	REPAIR	ALTERATION
AIRFRAME	(As described in item 1 above)				XXX
POWERPLANT					
PROPELLER					
APPLIANCE	TYPE / MANUFACTURER				

6. CONFORMITY STATEMENT

A. AGENCY'S NAME AND ADDRESS	B. KIND OF AGENCY	C. CERTIFICATE NO.
Air Carrier Electronics, Inc. Meacham Field Loc. 18C Ft. Worth, Tx. 76106	U.S. CERTIFICATED MECHANIC FOREIGN CERTIFICATED MECHANIC X CERTIFICATED REPAIR STATION MANUFACTURER	4337

D. I certify that the repair and/or alteration made to the unit(s) identified in item 4 above and described on the reverse or attachments hereto have been made in accordance with the requirements of Part 43 of the U.S. Federal Aviation Regulations and that the information furnished herein is true and correct to the best of my knowledge.

DATE	SIGNATURE OF AUTHORIZED INDIVIDUAL
Feb. 14, 1979	Gerald F. Heffley, Chief Inspector

7. APPROVAL FOR RETURN TO SERVICE

Pursuant to the authority given persons specified below, the unit identified in item 4 was inspected in the manner prescribed by the Administrator of the Federal Aviation Administration and is ☒ APPROVED ☐ REJECTED

BY							
		FAA FLT. STANDARDS INSPECTOR		MANUFACTURER		INSPECTION AUTHORIZATION	OTHER (Specify)
		FAA DESIGNEE	X	REPAIR STATION		CANADIAN DEPARTMENT OF TRANSPORT INSPECTOR OF AIRCRAFT	

DATE OF APPROVAL OR REJECTION	CERTIFICATE OR DESIGNATION NO.	SIGNATURE OF AUTHORIZED INDIVIDUAL
Feb 14, 1979	4337	Gerald F. Heffley, Chief Inspector

FAA Form 337 (7-67) ☆ U.S. Government Printing Office 1977—772-646/141 (8320)

FAA AIRCRAFT REGISTRY
CAMERA NO. 2 DATE: 6-23-83

NOTICE

Weight and balance or operating limitation changes shall be entered in the appropriate aircraft record. An alteration must be compatible with all previous alterations to assure continued conformity with the applicable airworthiness requirements.

8. DESCRIPTION OF WORK ACCOMPLISHED *(If more space is required, attach additional sheets. Identify with aircraft nationality and registration mark and date work completed.)*

1. Removed regular sensitive altimeter andi installed Aerosonic 101627-01696L encoding altimeter in same insturment cut-out in panel. The unit was installed in accordance with FAA manuals AC 43.13-1, AC 43.13-2 and manufacturer's instructions, and ramp checked with KXP-755 transponder per FAA Advisory Circular X 43-6.

2. There was no significant change in weight and balance or current drain from aircraft electrical system

0-1	C		APS-1	M-1
0-2				M-2
0-3	RECEIVED			M-3
0-4	FEB 16 1979			M-4
0-5	FAA-SW-GADO-4 FTW			
0-6	C-1	C-2	C-3	
0-7	C-4	C-5	C-6	

☐ ADDITIONAL SHEETS ARE ATTACHED

FAA AIRCRAFT REGISTRY
CAMERA NO. 2 DATE: 6-23-83

DEPARTMENT OF TRANSPORTATION
FEDERAL AVIATION ADMINISTRATION

MAJOR REPAIR AND ALTERATION
(Airframe, Powerplant, Propeller, or Appliance)

Form Approved
Budget Bureau No. 04-R060.1

FOR FAA USE ONLY

OFFICE IDENTIFICATION ACO
R-3-05

INSTRUCTIONS: Print or type all entries. See FAR 43.9, FAR 43 Appendix B, and AC 43.9-1 (or subsequent revision thereof) for instructions and disposition of this form.

1. AIRCRAFT	MAKE: Grumman	MODEL: G-73
	SERIAL NO.: J-13	NATIONALITY AND REGISTRATION MARK: N2442H
2. OWNER	NAME (As shown on registration certificate): Barnett Leasing Co.	ADDRESS (As shown on registration certificate): P.O. Box 919 Fort Lauderdale, Fla. 33302

3. FOR FAA USE ONLY

4. UNIT IDENTIFICATION				5. TYPE	
UNIT	MAKE	MODEL	SERIAL NO.	REPAIR	ALTERATION
AIRFRAME	(As described in item 1 above)			X	
POWERPLANT					
PROPELLER					
APPLIANCE	TYPE / MANUFACTURER				

6. CONFORMITY STATEMENT

A. AGENCY'S NAME AND ADDRESS	B. KIND OF AGENCY	C. CERTIFICATE NO.
Thomas W. Hill 3001 Island Drive Miramar, Fla. 33023	X U.S. CERTIFICATED MECHANIC FOREIGN CERTIFICATED MECHANIC CERTIFICATED REPAIR STATION MANUFACTURER	A&P 2649[illegible]519

D. I certify that the repair and/or alteration made to the unit(s) identified in item 4 above and described on the reverse or attachments hereto have been made in accordance with the requirements of Part 43 of the U.S. Federal Aviation Regulations and that the information furnished herein is true and correct to the best of my knowledge.

DATE	SIGNATURE OF AUTHORIZED INDIVIDUAL
Oct 21, 1974	Thomas W. Hill

7. APPROVAL FOR RETURN TO SERVICE

Pursuant to the authority given persons specified below, the unit identified in item 4 was inspected in the manner prescribed by the Administrator of the Federal Aviation Administration and is X APPROVED ☐ REJECTED

BY							OTHER (Specify)
		FAA FLT. STANDARDS INSPECTOR		MANUFACTURER	X	INSPECTION AUTHORIZATION	
		FAA DESIGNEE		REPAIR STATION		CANADIAN DEPARTMENT OF TRANSPORT INSPECTOR OF AIRCRAFT	

DATE OF APPROVAL OR REJECTION	CERTIFICATE OR DESIGNATION NO.	SIGNATURE OF AUTHORIZED INDIVIDUAL
10-21-74	A&P1460352AI	Victor Kaloski

FAA Form 337 (7-67) (8320)

FAA AIRCRAFT REGISTRY
CAMERA NO. 2 DATE: 6-23-83

NOTICE

Weight and balance or operating limitation changes shall be entered in the appropriate aircraft record. An alteration must be compatible with all previous alterations to assure continued conformity with the applicable airworthiness requirements.

8. DESCRIPTION OF WORK ACCOMPLISHED *(If more space is required, attach additional sheets. Identify with aircraft nationality and registration mark and date work completed.)*

Repaired the left flap by straighting the 7th and 8th rib and installin a doubler of same thickness of 2024-T3 aluminum and replacing 2024-T3 aluminum of same thickness as original on the bottom of the flap between the 6th and 9th rib and from spar to trailing edge. Formed a 2024-T3 aluminum, same thickness as original between the 7th and 8th rib from ~~spar~~ from front spar to front spar on the leading edge of flap.

Repair accomplished in accordance with AC 43.13-1A; Chapter 2 and Section 3.

RECEIVED OCT 25 1974 SO-GADO-S MIAMI

☐ ADDITIONAL SHEETS ARE ATTACHED

FAA AIRCRAFT REGISTRY
CAMERA NO. 2 DATE: 6-23-83

DEPARTMENT OF TRANSPORTATION
FEDERAL AVIATION ADMINISTRATION

MAJOR REPAIR AND ALTERATION
(Airframe, Powerplant, Propeller, or Appliance)

Form Approved
Budget Bureau No. 04-R060.1

FOR FAA USE ONLY
OFFICE IDENTIFICATION SO-GADO
7-3-05

INSTRUCTIONS: Print or type all entries. See FAR 43.9, FAR 43 Appendix B, and AC 43.9-1 (or subsequent revision thereof) for instructions and disposition of this form.

1. AIRCRAFT	MAKE: Grumman	MODEL: G-73
	SERIAL NO.: J-13	NATIONALITY AND REGISTRATION MARK: N2442H
2. OWNER	NAME (As shown on registration certificate): Barnett Leasing, Inc.	ADDRESS (As shown on registration certificate): P.O. Box 919, Fort Lauderdale, Fla. 33302

3. FOR FAA USE ONLY

4. UNIT IDENTIFICATION				5. TYPE	
UNIT	MAKE	MODEL	SERIAL NO.	REPAIR	ALTERATION
AIRFRAME	(As described in item 1 above)				X
POWERPLANT					
PROPELLER					
APPLIANCE	TYPE / MANUFACTURER				

RECEIVED DEC 21 1976 SO-GADO-5 MIAMI

6. CONFORMITY STATEMENT

A. AGENCY'S NAME AND ADDRESS	B. KIND OF AGENCY	C. CERTIFICATE NO.
Hill Air Co., Inc. 4300 S. W. 12th Terrance Fort Lauderdale, Fla.	U.S. CERTIFICATED MECHANIC / FOREIGN CERTIFICATED MECHANIC / X CERTIFICATED REPAIR STATION / MANUFACTURER	CRS 705-80

D. I certify that the repair and/or alteration made to the unit(s) identified in item 4 above and described on the reverse or attachments hereto have been made in accordance with the requirements of Part 43 of the U.S. Federal Aviation Regulations and that the information furnished herein is true and correct to the best of my knowledge.

DATE: 12-20-76
SIGNATURE OF AUTHORIZED INDIVIDUAL: Victor Kaloski

7. APPROVAL FOR RETURN TO SERVICE

Pursuant to the authority given persons specified below, the unit identified in item 4 was inspected in the manner prescribed by the Administrator of the Federal Aviation Administration and is [X] APPROVED [ ] REJECTED

BY							
		FAA FLT. STANDARDS INSPECTOR		MANUFACTURER		INSPECTION AUTHORIZATION	OTHER (Specify)
		FAA DESIGNEE	X	REPAIR STATION		CANADIAN DEPARTMENT OF TRANSPORT INSPECTOR OF AIRCRAFT	

DATE OF APPROVAL OR REJECTION	CERTIFICATE OR DESIGNATION NO.	SIGNATURE OF AUTHORIZED INDIVIDUAL
12-20-76	CRS 705-80	Victor Kaloski

FAA Form 337 (7-67) (8320)

GPO : 1971 O - 410-878

FAA AIRCRAFT REGISTRY
CAMERA NO. 2 DATE: 6-23-83

NOTICE

Weight and balance or operating limitation changes shall be entered in the appropriate aircraft record. An alteration must be compatible with all previous alterations to assure continued conformity with the applicable airworthiness requirements.

8. DESCRIPTION OF WORK ACCOMPLISHED *(If more space is required, attach additional sheets. Identify with aircraft nationality and registration mark and date work completed.)*

Removed a Edo-Aire ELT, model ELT-551, s/n 11640 and installed a Narco Avionics ELT 10, s/n 55222 on the same plate as previously installed EDO-Aire which is on the left side of baggage compartment at sta. 455.

Installation accomplished using equipment and installation instructions supplied by the manufacturer. Weight and Balance change is negibable.

☐ ADDITIONAL SHEETS ARE ATTACHED

FAA AIRCRAFT REGISTRY
CAMERA NO. 2 DATE: 6-23-83

Form Approved
Budget Bureau No. 04-R0058

DEPARTMENT OF TRANSPORTATION
FEDERAL AVIATION ADMINISTRATION

APPLICATION FOR AIRWORTHINESS CERTIFICATE

INSTRUCTIONS—Print or type. Do not write in shaded areas; these are for FAA use only. Submit original only to an authorized FAA Representative. If additional space is required, use an attachment. For special flight permits complete Sections II and VI or VII as applicable.

I. AIRCRAFT DESCRIPTION

1. REGISTRATION MARK	2. AIRCRAFT BUILDER'S NAME (make)	3. AIRCRAFT MODEL DESIGNATION	4. YR. MFG.	FAA CODING
N2442H	Grumman	G-73	1947	3951802
5. AIRCRAFT SERIAL NO.	6. ENGINE BUILDER'S NAME (make)	7. ENGINE MODEL DESIGNATION		52016
J-13	P & W	R-1340-51 MI		
8. NUMBER OF ENGINES	9. PROPELLER BUILDER'S NAME (make)	10. PROPELLER MODEL DESIGNATION		11. AIRCRAFT IS: NEW / USED / IMPORT
2	Hamilton Standard	23 D 40		

II. CERTIFICATION REQUESTED

APPLICATION IS HEREBY MADE FOR: (Check applicable items)

A 1 X STANDARD AIRWORTHINESS CERT. (Indicate category) — NORMAL [ ] UTILITY [ ] ACROBATIC [X] TRANSPORT [ ] GLIDER [ ] BALLOON

B SPECIAL AIRWORTHINESS CERTIFICATE (Check appropriate items)

- 2 LIMITED
- 5 PROVISIONAL (Indicate class): 1 CLASS I; 2 CLASS II
- 3 RESTRICTED (Indicate operation(s) to be conducted): 1 AGRICULTURE & PEST CONTROL; 2 AERIAL SURVEYING; 3 AERIAL ADVERTISING; 4 FOREST (Wild life conservation); 5 PATROLLING; 6 WEATHER CONTROL; 0 OTHER (Specify)
- 4 EXPERIMENTAL (Indicate operation(s) to be conducted): 1 RESEARCH AND DEVELOPMENT; 2 AMATEUR BUILT; 3 EXHIBITION; 4 RACING; 5 CREW TRAINING; 6 MKT. SURVEY; 0 TO SHOW COMPLIANCE WITH FAR
- 8 SPECIAL FLIGHT PERMIT (Indicate operation to be conducted then complete Section VI or VII as applicable on reverse side): 1 FERRY FLIGHT FOR REPAIRS, ALTERATIONS, MAINTENANCE OR STORAGE; 2 EVACUATE FROM AREA OF IMPENDING DANGER; 3 OPERATION IN EXCESS OF MAX. CERTIFICATED TAKE-OFF WEIGHT; 4 DELIVERING OR EXPORT; 5 PRODUCTION FLIGHT TESTING

C 6 MULTIPLE AIRWORTHINESS CERTIFICATE (Check appropriate Restricted Operation and Standard or Limited as applicable above)

III. OWNER'S CERTIFICATION

A. REGISTERED OWNER (As shown on Certificate of Aircraft Registration) — IF DEALER, CHECK HERE →

NAME: CROW, INC.
ADDRESS: P. O. Box 102, Swanton, Ohio 43558

B. AIRCRAFT CERTIFICATION BASIS (Check applicable blocks and complete items as indicated)

X AIRCRAFT SPECIFICATION OR TYPE CERTIFICATION DATA SHEET (Give No. and Revision No.): A-783-4
X AIRWORTHINESS DIRECTIVES (Check if all applicable AD's complied with and give latest AD No.): 73-16-3
AIRCRAFT LISTING (Give page No(s).): NA
SUPPLEMENTAL TYPE CERTIFICATE (List number of each STC incorporated): NA

C. AIRCRAFT OPERATION AND MAINTENANCE RECORDS

X CHECK IF RECORDS IN COMPLIANCE WITH FAR 91.173
TOTAL AIRFRAME HOURS—~~date for aircraft only~~: 5023
EXPERIMENTAL ONLY—Enter hours flown since last certificate issued or renewed: NA

D. CERTIFICATION—I hereby certify that I am the owner (or his agent) of the aircraft described above; that the aircraft is registered with the Federal Aviation Administration in accordance with Section 501 of the Federal Aviation Act of 1958, and applicable Federal Aviation Regulations; and that the aircraft has been inspected and is airworthy and eligible for the airworthiness certificate requested.

DATE OF APPLICATION	NAME AND TITLE (Print or type)	SIGNATURE
7/27/73	Leon E. Barnum, President	Leon E. Barnum

IV. INSPECTION AGENCY VERIFICATION

A. THE AIRCRAFT DESCRIBED ABOVE HAS BEEN INSPECTED AND FOUND AIRWORTHY BY: (Complete this section only if FAR 21.183 (d) applies)

2 FAR PART 121 OR 127 CERTIFICATE HOLDER (Give Certificate No.)
3 X CERTIFICATED MECHANIC (Give Certificate No.): 1411528 IA
6 CERTIFICATED REPAIR STATION (Give Certificate No.)
5 AIRCRAFT MANUFACTURER (Give Name of Firm)

DATE	TITLE	SIGNATURE
7/27/73	W. E. Tanner Inspection Authorization #1411528	W. E. Tanner

V. FAA REPRESENTATIVE CERTIFICATION

(Check ALL applicable blocks) I find that the aircraft described in Section I or VII meets the requirements for: [X] The certification requested, or [ ] Amendment or modification of its current airworthiness certificate. Inspection for a special flight permit under Section VII was conducted by: [ ] FAA Inspector; certificate holder under [ ] FAR 65, [ ] FAR 121 or 127, or [ ] FAR 145.

DATE	DISTRICT OFFICE	DESIGNEE'S SIGNATURE AND NO.	FAA INSPECTOR'S SIGNATURE
7/31/73	GL-EMDO-C- -0-48		John C. Curtice John C. Curtice

FAA Form 8130-6 (7-70)

FAA AIRCRAFT REGISTRY
CAMERA NO. 2 DATE: 6-23-83

VI. PRODUCTION FLIGHT TESTING

A. MANUFACTURER

NAME	ADDRESS

B. PRODUCTION BASIS *(Check applicable item)*

- [ ] PRODUCTION CERTIFICATE *(Give production certificate number)*
- [ ] TYPE CERTIFICATE ONLY
- [ ] APPROVED PRODUCTION INSPECTION SYSTEM

C. GIVE QUANTITY OF CERTIFICATES REQUIRED FOR OPERATING NEEDS:

DATE OF APPLICATION	NAME AND TITLE *(Print or type)*	SIGNATURE

VII. SPECIAL FLIGHT PERMIT PURPOSES OTHER THAN PRODUCTION FLIGHT TEST

A. DESCRIPTION OF AIRCRAFT

REGISTERED OWNER	ADDRESS
BUILDER *(Make)*	MODEL
SERIAL NUMBER	REGISTRATION MARK

B. DESCRIPTION OF FLIGHT

FROM	TO
VIA	DEPARTURE DATE / DURATION

C. CREW REQUIRED TO OPERATE THE AIRCRAFT AND ITS EQUIPMENT

[ ] PILOT [ ] CO-PILOT [ ] NAVIGATOR [ ] OTHER *(Specify)*

D. THE AIRCRAFT DOES NOT MEET THE APPLICABLE AIRWORTHINESS REQUIREMENTS AS FOLLOWS:

E. THE FOLLOWING RESTRICTIONS ARE CONSIDERED NECESSARY FOR SAFE OPERATION *(Use attachment if necessary)*

RECEIVED AUG 31 11 14 MANUFACTURING

F. CERTIFICATION—I hereby certify that I am the registered owner (or his agent) of the aircraft described above; that the aircraft is registered with the Federal Aviation Administration in accordance with Section 501 of the Federal Aviation Act of 1958, and applicable Federal Aviation Regulations; and that the aircraft has been inspected and is airworthy for the flight described.

DATE	NAME AND TITLE *(Print or type)*	SIGNATURE

VIII. AIRWORTHINESS DOCUMENTATION (FAA use only)

X	A. Operating Limitations and Markings in Compliance with FAR 91.31 as Applicable		G. Statement of Conformity, FAA Form 317 *(Attach when required)*
	B. Current Operating Limitations Attached		H. Foreign Airworthiness Certification for Import Aircraft *(Attach when required)*
	C. Data, Drawings, Photographs, etc. *(Attach when required)*	X	I. Previous Airworthiness Certificate Issued in Accordance with FAR 21.197(b) CAR _____ *(Original attached)*
X	D. Current Weight and Balance Information Available in Aircraft		
	E. Major Repair and Alteration, FAA 337 *(Attach when required)*	X	J. Current Airworthiness Certificate Issued in Accordance with FAR 21.183(d) _____ *(Copy attached)*
X	F. This Inspection Recorded in Aircraft Records		

FAA AIRCRAFT REGISTRY
CAMERA NO. 2 DATE: 6-23-83

UNITED STATES OF AMERICA — FEDERAL AVIATION AGENCY

STANDARD AIRWORTHINESS CERTIFICATE

1. NATIONALITY AND REGISTRATION MARKS	2. MANUFACTURER AND MODEL	3. AIRCRAFT SERIAL NUMBER	4. CATEGORY
N2442H	Grumman G-73	J-13	Transport

5. AUTHORITY AND BASIS FOR ISSUANCE
This airworthiness certificate is issued pursuant to the Federal Aviation Act of 1958 and certifies that, as of the date of issuance, the aircraft to which issued has been inspected and found to conform to the type certificate therefor, to be in condition for safe operation, and has been shown to meet the requirements of the applicable comprehensive and detailed airworthiness code adopted by Annex 8 to the Convention on International Civil Aviation, except as noted herein.
Exceptions: NONE

6. TERMS AND CONDITIONS
Unless sooner surrendered, suspended, revoked, or a termination date is otherwise established by the Administrator, this airworthiness certificate is effective as long as the maintenance, preventative maintenance, and alterations are performed in accordance with Parts 43, 43, and 91 of the Federal Aviation Regulations, as appropriate, and the aircraft is registered in the United States.

DATE OF ISSUANCE	FAA REPRESENTATIVE	DESIGNATION NUMBER
Aug. 17, 1973	John C. Curtice	GL-ENDO-C-0-48

Any alteration, reproduction, or misuse of this certificate may be punishable by a fine not exceeding $1,000, or imprisonment not exceeding 3 years, or both. THIS CERTIFICATE MUST BE DISPLAYED IN THE AIRCRAFT IN ACCORDANCE WITH APPLICABLE FEDERAL AVIATION REGULATIONS.

FAA Form 1362 (7-65) ★ GPO : 1966 O - 798-353 0052-040-8000 (8100)

FAA AIRCRAFT REGISTRY
CAMERA NO. 2 DATE: 6-23-83

Form ACA 26
(Rev. 10-15-40)

United States of America

DEPARTMENT OF COMMERCE
CIVIL AERONAUTICS ADMINISTRATION
Washington, D. C.

L-11301

Certificate of Airworthiness

(FOR EXPORT)

- TO CANADA -

This certifies that the aircraft specified below and more particularly described in the accompanying specification s has been found AIRWORTHY in accordance with the airworthiness requirements of the Civil Aeronautics Board and complies with the special requirements of Canada.

"The aircraft described herein, having tentative approval only, is subject to modification upon final approval and issuance of the applicable specification in order that the subject or like aircraft may be eligible for certification in the United States."

Weight and Balance data, dated January 16, 1947, including equipment list, is attached and made part of the certificate. (Part V of Revised Preliminary Operating Manual)

Revised Preliminary Operating Manual and Preliminary Service Manual are attached.

Engines: Pratt & Whitney - right and left - S3H1

Propellers: Hamilton Standard - Hydromatic, full feathering - right and left - Dural Metal - 23D-40-51

Actual empty weight: 9191.3 pounds

Standard weight: 12,500 pounds

Before adding, removing or relocating any item of equipment, contact Air Authority of the Country of Registry.

Manufactured by GRUMMAN AIRCRAFT ENGINEERING CORPORATION - January 14, 1947

Type AMPHIBIAN MONOPLANE

Model G-73

Serial No. J-13

Date January 24, 1947

J. G. Saure
Chief, Manufacturing Inspection Division

U. S. GOVERNMENT PRINTING OFFICE 16—14266—1

FAA AIRCRAFT REGISTRY
CAMERA NO. 2 DATE: 6-23-83

FAA AIRCRAFT REGISTRY
CAMERA NO. 2 DATE: 6-23-83

Form ACA 806
(Rev. 2-1-42)

Budget Bureau No. 41-R042.1.
Approval expires 9-30-45.

UNITED STATES OF AMERICA
DEPARTMENT OF COMMERCE
CIVIL AERONAUTICS ADMINISTRATION
WASHINGTON

CERTIFICATE NO. E-11301

APPLICATION FOR CERTIFICATE OF AIRWORTHINESS FOR EXPORT

To the CIVIL AERONAUTICS ADMINISTRATION:

Application is hereby made for a CERTIFICATE OF AIRWORTHINESS FOR EXPORT.

1. Name of applicant Grumman Aircraft Engineering Corporation (Print or type name)

   Address Bethpage, Long Island, New York

2. For export to Canada (Name of country)

3. Foreign purchaser Lord Beaverbrook (Print or type name)

   Address Fredericton, New Brunswick

DESCRIPTION OF AIRCRAFT, COMPONENT, OR ACCESSORY

4. Name of manufacturer and model designation Grumman Aircraft Engineering Corporation Model G-73

5. Type of component or accessory (Complete wing, fuselage, stabilizer, etc.)

6. Manufacturer's serial No. J-13

7. Manufactured under Production Certificate No. ....., in conformity with Type Certificate No. 703 Tentativ

8. Date of construction January 14, 1947 9. Date reconstructed

10. Identification mark assigned aircraft CF-FFG

11. ENGINES

Manufacturer	Model	Spec. No.	Serial No.	HP
Pratt & Whitney Right	S3H1	E-143-2	P-327930	600
Pratt & Whitney Left	S3H1	E-143-2	P-327932	600

12. PROPELLER

Manufacturer	Type (Fixed, adjustable, controllable)	Material	Hubs—Spec. No. Model	Hubs—Spec. No. Serial No.	Blades—Spec. No. Model	Blades—Spec. No. Serial No.
Hamilton Standard	Right hydromatic	Dural Metal	23D-40-51	158865	6533A-12	P 515410
	Left full feathering		"	158759	"	[illegible]

This application should be submitted to the local Civil Aeronautics Inspector when the aircraft or component is presented for inspection

[OVER]

10—94003-2

FAA AIRCRAFT REGISTRY
CAMERA NO. 2 DATE: 6-23-83

13. The aircraft shall be flight tested immediately prior to inspection for export.

State date of such flight test 1/16/47 During such test, did the controls, engine, and all instruments function properly? Yes

I CERTIFY that the foregoing statements are true.

Date 1/16/47

GRUMMAN AIRCRAFT ENGINEERING CORPORATION

Signature of owner(s) Agent

D. H. Cameron

Test Pilot
(Title)

THE FOLLOWING INFORMATION SHALL BE FURNISHED

14. A weight and balance report, in duplicate, showing the empty weight of the aircraft as equipped, the weight of each removable item of equipment included therein, and the location of the center of gravity of the empty aircraft. The report should be signed by the applicant or a responsible representative of the applicant and approved by the inspector.

15. A loading schedule, in duplicate, in the case of aircraft for which such a schedule is required by the Administration.

16. Rigging information, in duplicate, where it is possible to rig wings in the field.

REMARKS Prior Eligibility Has Been Established

IMPORTANT

An aircraft shall be inspected and the weight empty as equipped, in level flying position, determined, and a component or accessory shall be inspected and suitably identified by an inspector of the Civil Aeronautics Administration prior to export.

Only complete aircraft or aircraft units having type approvals in themselves or major assemblies of aircraft structural parts are eligible for a certificate of airworthiness for export.

Items in this class include complete aircraft, aircraft engines, propellers, wheels, floats, skis, position lights, landing flares, safety belts, or a complete wing, tail surface, aileron or fuselage.

NOTE.—Special import requirements of Australia, Canada, Great Britain, and New Zealand may be obtained from the local Civil Aeronautics Inspector, or Washington.

U. S. GOVERNMENT PRINTING OFFICE 16—94068-1

FAA AIRCRAFT REGISTRY
CAMERA NO. 2 DATE: 6-23-83

Form ACA 317
(Rev. 9-1-41)

UNITED STATES OF AMERICA
DEPARTMENT OF COMMERCE
CIVIL AERONAUTICS ADMINISTRATION
WASHINGTON

STATEMENT OF CONFORMITY

To the CIVIL AERONAUTICS ADMINISTRATION:

I, having been authorized for this purpose by GRUMMAN AIRCRAFT ENGINEERING CORP. (Manufacturer) certify that the aircraft GRUMMAN MALLARD (Make), G73 (Model), J13 (Serial number), has been manufactured, ~~under Production Certificate No.~~ XXXXXXXXXXXXXXXXXXXXX,* in conformity with the data forming the basis for Type Certificate No. A-783 Tentative and any revision or modification thereof approved by the Administration as of 1/17/47 (Date), with the exception of the following deviations:

Prior Eligibility has been established.

DATE 1/17/47

Wm. T. Schwendler (Signature)

Wm. T. Schwendler
Executive Vice-President and Chief Engineer (Title)

---

* Delete this phrase if not applicable.

16—21045 U. S. GOVERNMENT PRINTING OFFICE

FAA AIRCRAFT REGISTRY
CAMERA NO. 2 DATE: 6-23-83

FAA AIRCRAFT REGISTRY
CAMERA NO. 2 DATE: 6-23-83

UNITED STATES OF AMERICA
DEPARTMENT OF TRANSPORTATION — FEDERAL AVIATION ADMINISTRATION

SPECIAL AIRWORTHINESS CERTIFICATE

A	CLASSIFICATION: Experimental		
	PURPOSE: Show compliance with FAR and crew training		
B	MANUFACTURER	NAME NA	
		ADDRESS NA	
C	FLIGHT	FROM NA	
		TO NA	
D	N-2442H		SERIAL NO. J13
	BUILDER Grumman		MODEL G-73
E	DATE OF ISSUANCE August 9, 1973		EXPIRY Sept. 30, 1973
	OPERATING LIMITATIONS DATED 8/9/73		ARE A PART OF THIS CERTIFICATE
	SIGNATURE OF FAA REPRESENTATIVE John C. Curtice		DESIGNATION OR OFFICE NO. GL-EMDO-C-0-48

Any alteration, reproduction, or misuse of this certificate may be punishable by a fine not exceeding $1,000 or imprisonment not exceeding 3 years, or both. THIS CERTIFICATE MUST BE DISPLAYED IN THE AIRCRAFT IN ACCORDANCE WITH APPLICABLE FEDERAL AVIATION REGULATIONS.

FAA FORM 8130-7 (3-69) SUPERSEDES FAA FORMS 1362-8; 8100-3; 8130-8 *SEE REVERSE SIDE*

FAA AIRCRAFT REGISTRY
CAMERA NO. 2 DATE: 6-23-83

	This airworthiness certificate is issued under the authority of the Federal Aviation Act of 1958 and the Federal Aviation Regulations (P).
B	This airworthiness certificate authorizes the manufacturer named on the reverse side to conduct production flight tests, and only production flight tests, of aircraft registered in his name. No person may conduct production flight tests under this certificate: (1) Carrying persons or property for compensation or hire; and/or (2) Carrying persons not essential to the purpose of the flight.
C	This airworthiness certificate authorizes the flight specified on the reverse side for the purpose shown in Block A.
D	This airworthiness certificate certifies that, as of the date of issuance, the aircraft to which issued has been inspected and found to meet the requirements of the applicable FAR. The aircraft does not meet the requirements of the applicable comprehensive and detailed airworthiness code as provided by Annex 8 to the Convention On International Civil Aviation. No person may operate the aircraft described on the reverse side: (1) except in accordance with the applicable FAR and in accordance with conditions and limitations which may be prescribed by the Administrator as part of this certificate; (2) over any foreign country without the special permission of that country.
E	Unless sooner surrendered, suspended, or revoked, this airworthiness certificate is effective for the duration and under the conditions prescribed in FAR Part 21, Section 21.181 or 21.217.

DEPARTMENT OF TRANSPORTATION
FEDERAL AVIATION ADMINISTRATION

Engineering & Mfg. District Office 48
Room 214, Terminal Building
Dayton Municipal Airport
Vandalia, Ohio 45377

August 9, 1973

OPERATING LIMITATIONS

AIRCRAFT MAKE: Grumman
AIRCRAFT MODEL: G-73

REGISTRATION MARKS: N2442H
SERIAL NUMBER: J13

1. No person may operate this aircraft for other than the purpose for which the special purpose airworthiness certificate was issued and the aircraft shall be operated in accordance with the applicable FAA Air Traffic and General Operating Rules.

2. All flights shall be conducted within the geographical area described as follows:

   After takeoff from Toledo Express Airport, fly most direct route to Maumee river, following the river to the SW end of Lake Erie for conducting flight test operations and return by same route.

   Remain in flight test area for 10 Hours or until the airworthy and flight characteristics are determined to be in conformance with the applicable FAR's.

   After aforementioned airworthy characteristics have been determined satisfactory, training flights may be conducted within a 100-mile radius of Toledo Express Airport.

3. No operations, including takeoffs and landings, shall be conducted over densely populated areas or in congested airways, except those takeoffs and landings authorized as follows: Toledo Express Airport.

4. Operator of this aircraft shall notify the control tower of the experimental nature of this aircraft when operating it into or out of airports with operating control towers. (For jet and high performance piston-powered aircraft, to advise tower of minimum runway requirements.)

5. Unless appropriately equipped for night and/or instrument flight in accordance with FAR 91.33, this aircraft must be operated Day VFR only.

6. This aircraft shall contain the placards, listings and instrument markings required by FAR 91.31.

7. No person may operate this aircraft for carrying persons or property for compensation or hire.

8. No person may be carried in the aircraft during flight unless that person is essential to the purpose of the flight.

9. The person operating this aircraft shall advise each person carried of the experimental nature of this aircraft.

10. Any major change to this aircraft, as defined by FAR 21.93, invalidates the special airworthiness certificate issued for this aircraft.

11. This aircraft does not comply with the Airworthiness Standards of ICAO Annex, Part II; therefore, flights are not authorized over foreign countries. Special permission must be obtained from foreign countries to conduct flights over their territories.

John C. Curtice
JOHN C. CURTICE
Manufacturing Inspector
GL-EMDO-48

cc:
AC-253

FAA AIRCRAFT REGISTRY
CAMERA NO. 2 DATE: 6-23-83

DEPARTMENT OF TRANSPORTATION
FEDERAL AVIATION ADMINISTRATION

MAJOR REPAIR AND ALTERATION
(Airframe, Powerplant, Propeller, or Appliance)

Form Approved
Budget Bureau No. 04-R060.1

FOR FAA USE ONLY
OFFICE IDENTIFICATION

INSTRUCTIONS: Print or type all entries. See FAR 43.9, FAR 43 Appendix B, and AC 43.9-1 (or subsequent revision thereof) for instructions and disposition of this form.

1. AIRCRAFT	MAKE: Grumman	MODEL: G-73
	SERIAL NO.: J-13	NATIONALITY AND REGISTRATION MARK: N2442H
2. OWNER	NAME (*As shown on registration certificate*): CROW, INC.	ADDRESS (*As shown on registration certificate*): P. O. Box 102, Swanton, Ohio 43558

3. FOR FAA USE ONLY

4. UNIT IDENTIFICATION				5. TYPE	
UNIT	MAKE	MODEL	SERIAL NO.	REPAIR	ALTERATION
AIRFRAME	(As described in item 1 above)			X	X
POWERPLANT	P & W	1340-51M1	42-13259	X	
PROPELLER	Hamilton Standard	23D40	158820 158817	X	
APPLIANCE	TYPE / MANUFACTURER				

6. CONFORMITY STATEMENT

A. AGENCY'S NAME AND ADDRESS	B. KIND OF AGENCY	C. CERTIFICATE NO.
W. E. Tanner 224 W. Chestnut Street Wauseon, Ohio 43558	☐ U.S. CERTIFICATED MECHANIC ☐ FOREIGN CERTIFICATED MECHANIC ☐ CERTIFICATED REPAIR STATION ☐ MANUFACTURER	1411528 IA

D. I certify that the repair and/or alteration made to the unit(s) identified in item 4 above and described on the reverse or attachments hereto have been made in accordance with the requirements of Part 43 of the U.S. Federal Aviation Regulations and that the information furnished herein is true and correct to the best of my knowledge.

DATE	SIGNATURE OF AUTHORIZED INDIVIDUAL
August 1, 1973	W E Tanner

7. APPROVAL FOR RETURN TO SERVICE

Pursuant to the authority given persons specified below, the unit identified in item 4 was inspected in the manner prescribed by the Administrator of the Federal Aviation Administration and is ☐ APPROVED ☐ REJECTED

BY							
	☐	FAA FLT. STANDARDS INSPECTOR	☐	MANUFACTURER	☐	INSPECTION AUTHORIZATION	OTHER (*Specify*)
	☐	FAA DESIGNEE	☐	REPAIR STATION	☐	CANADIAN DEPARTMENT OF TRANSPORT INSPECTOR OF AIRCRAFT	

DATE OF APPROVAL OR REJECTION	CERTIFICATE OR DESIGNATION NO.	SIGNATURE OF AUTHORIZED INDIVIDUAL

FAA Form 337 (7-67) (8320)

GPO : 1971 O - 410-878

FAA AIRCRAFT REGISTRY
CAMERA NO. 2 DATE: 6-23-83

NOTICE

Weight and balance or operating limitation changes shall be entered in the appropriate aircraft record. An alteration must be compatible with all previous alterations to assure continued conformity with the applicable airworthiness requirements.

8. DESCRIPTION OF WORK ACCOMPLISHED *(If more space is required, attach additional sheets. Identify with aircraft nationality and registration mark and date work completed.)*

W & B for 337

Installed:

1. Page A/C O.H. Eng 1340-51M1 Sn 13259 on rt side of A/C. Functional tested O.K.

2. Hamilton Standard Prop O.H. by H & S prop shop - Mod 23D40, SN 158820 & 158817. Functional tested O.K. AD 57-13-5 C/W by H & S.

3. A/C completely stripped, corrosion removed and treated, and entire A/C repainted with alumigrip paint.

4. New instrument panel was made up of same size & thickness material, mounted with new rubber mounts, to accomodate more inst holes. Post lighting on all inst. holes was also added, with dimer, per AC 43.13-2, Chap. 1, Par. 1, 4 & 5 & AC 43.13 -1, Chap. 11, Sec 2 & 3 & 7.

5. All new circuit breakers were installed & new false panel installed on lower center panel fwd. The control column this panel has all the radio C.B.'s & light dimers, and hour meters, also C.B. in rt wheel well junction box were replaced, per AC 43.13-1, Chap 11, Sec. 2, Par 242 & Sec. 7.

6. Surface combustion heater #ADS-100N-P41C, Item 105 on equip list, installed as per service and parts manuals.

7. All new floor boards were cut to fit from Bond-o-Light (B103) ½" thick by Goodyear Aerospace Division, of wood laminated between alum. secured same as original.

8. Fresh air sys modified to incorporate a Gasper Assembly, (69446-00 Piper P/N) at each seat position, giving each seat a air vent & reading lamp. The fresh air is directed from wing leading edge take offs on R & L inbd. L.E. between eng & fuselage, of factory installation, to central manafold, to each Gasper. The lamps are all hooked to one circuit breaker as per AC 43.13-1 Chap. 11, Sec. 2, 3 & 7.

9. Central cabin lighting installed running from front to back in the top of cabin. 9 lamps in front & 11 lamps in rear of cabin with one switch for front and one for rear and one circuit breaker for both. Per AC 43.13-1 Chap. 11, Sec. 2, 3 & 7.

10. Entrance lights installed, incorporating one lamp in fwd, and one lamp in rear of top cabin light sys & one lamp assembly above cabin entrance door, swt at entrance door controls this sys. and circuit breaker hooked in front of battery master switch. This sys also used as "Emergency Exit" light as per CAR 4b.362 (f) & AC 43.13-1, Chap. 11, Sec 2,3 & 7.

☐ ADDITIONAL SHEETS ARE ATTACHED

11. 2 each 24 volt hi pack lectric bilge pumps installed to pump out bilge water. One installed under entrance step with a swt & circuit breaker for aft sect of A/C and one installed in fwd bagg. comp. rt side with swt. and circuit breaker for fwd. pump. A swt. installed at the circuit breaker panel to select either A/c "A+" or "A+" from outside source. (batt. or a portable generator.) A selector valve is located next to each pump to select different compartments to be pumped out, as per 43.13-1, Chap 11, sec. 2, 3 & 7.
12. Whelen strobe, HR-28V, installed on vert. fin, in factory provided lights mount. Per standard installation manual & STC SA615EA. All wiring per AC 43.13 2 Chap. 4

13. Anti squat motor installed in aft. sect. of A/C @ sta 452, to raise & lower tail strut, same as 337 on SN J 42, N51151, per AC 43.13-1 Sec 2, 3 & 7 of Chap. 11.

14. All fabric covered control services rudder, elevators, and ailerons were covered with ceconite covers per STC. SA 1351 W E

15. Piper PA31 elevator trim indicator installed in overhead panel next to trim control wheel. Trim sensior is a unit of local mfgr. to convert the trim cable movement of 2" to 105° of rotation on a 500 OHM potentiometer that the PA 31 uses. The sensior unit is located at the 472 sta. sensior constructed per enclosed dwg. All wiring per PA 31 ser. manual & AC 43.13-1, Chap. 11 Sec. 2, 3, & 7.

16. Rear four seats attachments were converted to use widjets for easy removal. Alum. angle stiffeners under floor boards were installed, to anchor the widjets. (PN295307) All seats were reupholstered, per AC 43.13-2, Chap. 1 Par. 1, 2, 4, 5, 6.

17. Interior cabin upholstery material was tested for fire resistance & will not support combustion. Test was performed by trying to burn material with torch.

18. 2 each ARC R-30 A.D.F. with 2 ea. DV-14A power supplies, 2 ea loop antennas, 2 each sense antennas, with one IN-13A-1 indicator, along with one Skyranger HC-5-R hi frequency transceiver and 2 ea Gravener D-1200 fire detector sys. were previously installed by persons unknown. The receivers and power supplies are installed on forward factory provided radio shelves. Loop antennas are installed on top of fuselage on center line at station 144" & 192". Sense antenna installed on top of fuselage starting at fwd of windshield up through ax handle stand off to sta. 180" R. & L. of center. Hi frequ. antenna on top of fuselage, starting at fwd of windshield up through ax handle standoff to top of vert. fin.

Danco mod. 701A digital ADF indicator installed in panel above ADF indicator.

Collins (618F-1) Communication control, 2 ATF control heads (C59A) control for hi freq., ARC (Rt-11A) control head, ARC (M-32) Audio control panel & (PM-1) marker lites are all mounted in the lower half of inst. panel, or radio control panel, and Plantronics boom mic.

2 each Collins Nav. receivers (51 x 3) and 2 Indicators are installed in instrument holes below ADF indicator.

All remote power supplies, transceivers, and receivers are mounted on factory provided radio shelves with factory provided shock mounts, and installed as per mfgrs. maintenance & installation manuals.

FAA AIRCRAFT REGISTRY
CAMERA NO. 2 DATE: 6-23-83

One Comm. ant. previously installed at the 378" sta. We installed a (VCA-1) comm. ant. on top of fuselage rt of center at the 106" sta. The NAV. ant (NH-33) is installed on vert. fin at 547" sta. All antennas were installed as per manufacturers installation & maintenance manuals.

All work in accordance with manufacturers installation and maintenance manuals & AC 43.13-2, Chap. 1, 2, 3. Fig. 2.4, 2.5, 3.1, 3.3, 3.6, 3.12, 3.13, 3.15, 3.20, and AC 43.13-1, Sec. 2, 3 & 7.

Elect. load analysis taken & elect. load does not exceed 80% of gen. output of 100 amps. per AC 43.13-1, Chap., 11, Par. 241.

19. Installed permanent type spray rails along fwd. sections of L & R chines. Installation originally approved on G Grumman G-73, N1628, 337 dated 12-23-53.

20. The following accessories deviate from the T.C. data sheet.

Batt: T.C. sheet calls for exide 12-TS-9L
We used exide 12-TS-11N-3150-2
Approved by letter dated June 11, 1973 from the batt. mfgr. Wisco Division of E S B, Inc.

Vacc Pumps: T.C. sheet calls for type B-28
Pesco 3P207-JA AN 6111-1
We used type B-12 3P207-JD AN 6111-1
Both units have same AN No. and are interchangeable.

Fuel boost pumps: T.C. sheet calls for a Thompson TFD-10300, AN4100
We used Pesco PB400BRD, AN 4100
Both units have same AN No. and are interchangeable.

A/C was weighed and new weight and balance report was made up.

Equipment list revised to show above changes.

Tach time this date, 5023 hours.

FAA AIRCRAFT REGISTRY
CAMERA NO. 2 DATE: 6-23-83

FAA AIRCRAFT REGISTRY
CAMERA NO. 2 DATE: 6-23-83

AIRPLANE WEIGHING DATA:
DATE WEIGHED— 7-28-73

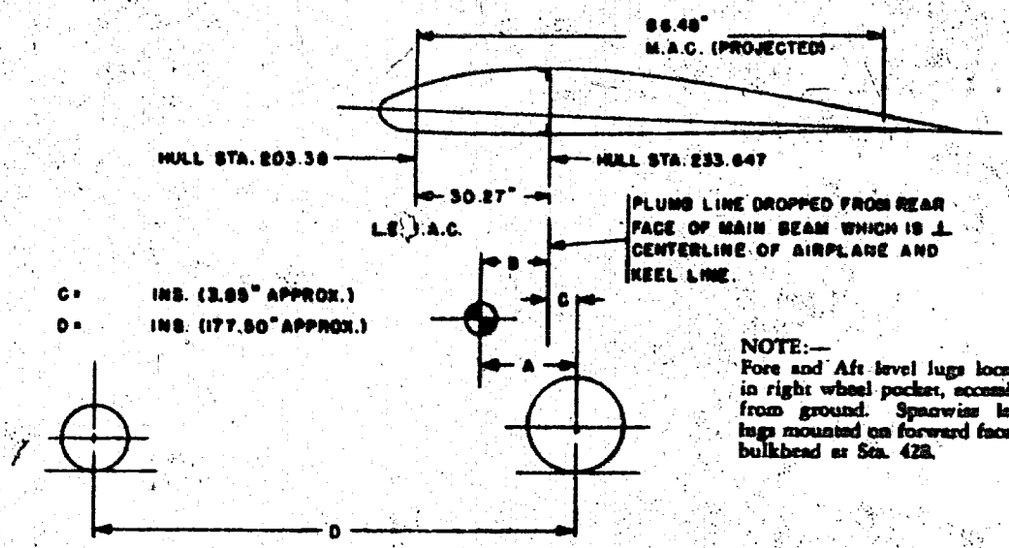

NOTE:—
Fore and Aft level lugs located in right wheel pocket, accessible from ground. Spanwise level lugs mounted on forward face of bulkhead at Sta. 428.

REACTIONS	SCALE READING	TARE	CORRECTED READING
Right Wheel — W_R	4382	0	4382
Left Wheel — W_L	4119	0	4119
Nose Wheel — W_N	1920	0	1920
	10421	0	10421

A = C.G. inches forward of centerline Main Wheels — $\frac{W_N \times D}{W_R + W_L + W_N \text{ (corrected)}} = \frac{1920 \times 157}{10421} = 28.93$

B = C.G. inches forward of Rear Face Main Beam — A—C = 28.93 - 16.35 = 12.58

C.G. inches aft of Reference Datum — 233.65 — B = 233.65 - 12.58 = 221.07

CORRECTION FOR MISSING ITEMS

	WEIGHT	ARM	MOMENT
Airplane as Weighed	10421	221.1	2304083
Remove fuel	- 840	220.0	- 184800
Additional Trapped Fuel in Flight		220	
Remove oil	- 112	212.0	23744
Non useable fuel	+ 54	220.	+ 11880
Empty Weight	9523	221.30	21074.19

Empty Weight C.G. = 221.30 " Aft of Reference Datum or 12.35 " Forward of Hull

Sta. 233.65 (Rear Face of Main Wing Beam) = $\frac{221.30 - 203.38}{86.48} \times 100 =$ 20.72 % M.A.C.

Witnessed:

Typed by #33

FAA AIRCRAFT REGISTRY
CAMERA NO. DATE: 6-23-83

AC-750

Form Approved
Budget Bureau No. 04-R0058

DEPARTMENT OF TRANSPORTATION
FEDERAL AVIATION ADMINISTRATION

APPLICATION FOR AIRWORTHINESS CERTIFICATE

INSTRUCTIONS—Print or type. Do not write in shaded areas, these are for FAA use only. Submit original only to an authorized FAA Representative. If additional space is required, use an attachment. For special flight permits complete Sections II and VI or VII as applicable.

I. AIRCRAFT DESCRIPTION

1. REGISTRATION MARK: N2442H	2. AIRCRAFT BUILDER'S NAME (make): Grumman	3. AIRCRAFT MODEL DESIGNATION: G-73	4. YR. MFG.: 1948
5. AIRCRAFT SERIAL NO.: J-13	6. ENGINE BUILDER'S NAME (make): P & W	7. ENGINE MODEL DESIGNATION: 1340-S1H1	FAA CODING
8. NUMBER OF ENGINES: 2	9. PROPELLER BUILDER'S NAME (make): Hamilton-Standard	10. PROPELLER MODEL DESIGNATION: 23D40	11. AIRCRAFT IS: NEW [ ] USED [X] IMPORT [ ]

II. CERTIFICATION REQUESTED

APPLICATION IS HEREBY MADE FOR: (Check applicable items)

A [1] STANDARD AIRWORTHINESS CERT. (Indicate category) NORMAL [ ] UTILITY [ ] ACROBATIC [ ] TRANSPORT [ ] GLIDER [ ] BALLOON [ ]

B [ ] SPECIAL AIRWORTHINESS CERTIFICATE (Check appropriate items)

- [2] LIMITED
- [5] PROVISIONAL (Indicate class): [1] CLASS I; [2] CLASS II
- [3] RESTRICTED (Indicate operation(s) to be conducted): [1] AGRICULTURE & PEST CONTROL; [2] AERIAL SURVEYING; [3] AERIAL ADVERTISING; [4] FOREST (Wild life conservation); [5] PATROLLING; [6] WEATHER CONTROL; [0] OTHER (Specify)
- [4] EXPERIMENTAL (Indicate operation(s) to be conducted): [1] RESEARCH AND DEVELOPMENT; [2] AMATEUR BUILT; [3] EXHIBITION; [4] RACING; [5] CREW TRAINING; [6] MKT. SURVEY; [0] TO SHOW COMPLIANCE WITH FAR
- [8] SPECIAL FLIGHT PERMIT (Indicate operation to be conducted then complete Section VI or VII as applicable on reverse side): [1] FERRY FLIGHT FOR REPAIRS, ALTERATIONS, MAINTENANCE OR STORAGE; [2] EVACUATE FROM AREA OF IMPENDING DANGER; [3] [X] OPERATION IN EXCESS OF MAX. CERTIFICATED TAKE-OFF WEIGHT; [4] DELIVERING OR EXPORT; [5] PRODUCTION FLIGHT TESTING

C [6] MULTIPLE AIRWORTHINESS CERTIFICATE (Check appropriate Restricted Operation and Standard or Limited as applicable above)

III. OWNER'S CERTIFICATION

A. REGISTERED OWNER (As shown on Certificate of Aircraft Registration) IF DEALER, CHECK HERE →

NAME	ADDRESS
Crow Inc.	Box 102, Swanton, Ohio

B. AIRCRAFT CERTIFICATION BASIS (Check applicable blocks and complete items as indicated)

AIRCRAFT SPECIFICATION OR TYPE CERTIFICATION DATA SHEET (Give No. and Revision No.): TC-783, Revision 4	AIRWORTHINESS DIRECTIVES (Check if all applicable AD's complied with and give latest AD No.): 67-31-7
AIRCRAFT LISTING (Give page No(s).): A-783-5	SUPPLEMENTAL TYPE CERTIFICATE (List number of each STC incorporated)

C. AIRCRAFT OPERATION AND MAINTENANCE RECORDS

CHECK IF RECORDS IN COMPLIANCE WITH FAR 91.173	TOTAL AIRFRAME HOURS—Enter for used aircraft only: 5010.00	[3] EXPERIMENTAL ONLY—Enter hours flown since last certificate issued or renewed

D. CERTIFICATION—I hereby certify that I am the owner (or his agent) of the aircraft described above; that the aircraft is registered with the Federal Aviation Administration in accordance with Section 501 of the Federal Aviation Act of 1958, and applicable Federal Aviation Regulations; and that the aircraft has been inspected and is airworthy and eligible for the airworthiness certificate requested.

DATE OF APPLICATION	NAME AND TITLE (Print or type)	SIGNATURE
3/30/71	Crow Inc.	Leon E. Barnes Pres.

IV. INSPECTION AGENCY VERIFICATION

A. THE AIRCRAFT DESCRIBED ABOVE HAS BEEN INSPECTED AND FOUND AIRWORTHY BY: (Complete this section only if FAR 21.183 (d) applies)

[2] FAR PART 121 OR 127 CERTIFICATE HOLDER (Give Certificate No.)	[3] [X] CERTIFICATED MECHANIC (Give Certificate No.): 1411528	[6] CERTIFICATED REPAIR STATION (Give Certificate No.)
[5] AIRCRAFT MANUFACTURER (Give Name of Firm)		

DATE	TITLE	SIGNATURE
3/30/71	Authorized Inspector	William Tanner

V. FAA REPRESENTATIVE CERTIFICATION

I have inspected the aircraft described in item I or VII and find it meets the requirements for:

[ ] A. STANDARD AIRWORTHINESS CERTIFICATE [X] B. SPECIAL AIRWORTHINESS CERTIFICATE

[4] C. AMENDMENT OR MODIFICATION OF ITS CURRENT AIRWORTHINESS CERTIFICATE

DATE	DISTRICT OFFICE	DESIGNEE'S SIGNATURE AND NO.	FAA INSPECTOR'S SIGNATURE
4/1/71	SFO IFO 6-0-52		R.A. Kuehn R.A. KUEHN

FAA Form 8130-6 (3-69) SUPERSEDES FAA FORM 305, AND FAA FORM 8100-3.

FAA AIRCRAFT REGISTRY
CAMERA NO. 2 DATE: 6-23-83

VI. PRODUCTION FLIGHT TESTING

A. MANUFACTURER
NAME | ADDRESS

B. PRODUCTION BASIS *(Check applicable item)*
- [ ] PRODUCTION CERTIFICATE *(Give production certificate number)*
- [ ] TYPE CERTIFICATE ONLY
- [ ] APPROVED PRODUCTION INSPECTION SYSTEM

C. GIVE QUANTITY OF CERTIFICATES REQUIRED FOR OPERATING NEEDS:

DATE OF APPLICATION | NAME AND TITLE *(Print or type)* | SIGNATURE

VII. SPECIAL FLIGHT PERMIT PURPOSES OTHER THAN PRODUCTION FLIGHT TEST

A. DESCRIPTION OF AIRCRAFT

REGISTERED OWNER: Crow Inc.	ADDRESS: Box 102 Swanton, Ohio
BUILDER *(Make)*: Grumman	MODEL: G-73
SERIAL NUMBER: J-13	REGISTRATION MARK: N2442H

B. DESCRIPTION OF FLIGHT

FROM: Suva, Fiji Islands	TO: San Francisco, California	
VIA: Tarawa, Honolulu, Hawaii	DEPARTURE DATE: 4/1/71	DURATION: 6/1/71

C. CREW REQUIRED TO OPERATE THE AIRCRAFT AND ITS EQUIPMENT
[X] PILOT [X] CO-PILOT [ ] NAVIGATOR [ ] OTHER *(Specify)* Engineer

D. THE AIRCRAFT DOES NOT MEET THE APPLICABLE AIRWORTHINESS REQUIREMENTS AS FOLLOWS:

The aircraft does not meet the applicable airworthiness requirements when operated at a weight in excess of its certificated weight of 13,500 lbs. The temporary fuel tank installation is in accordance with FAA Form 337 "Major Repair and Alteration dated 3/30/71 prepared by William Tanner, A & P 1411528.

E. THE FOLLOWING RESTRICTIONS ARE CONSIDERED NECESSARY FOR SAFE OPERATION *(Use attachment if necessary)*

1. Maximum weight must not exceed 14,850 lbs.
2. Maximum quantity of fuel carried in auxiliary tanks must not exceed 400 gals. Fuel in auxiliary fuel tanks will be consumed first to the extent practicable.
3. Center of gravity limits must not exceed (fwd) 15% MAC and (aft) 26.5 MAC
See attachment, Items 4,5,6,7,8,9,10 and 11.

RECEIVED AUG 16 '71 ENGINEERING AND MANUFACTURING BRANCH

F. CERTIFICATION—I hereby certify that I am the registered owner (or his agent) of the aircraft described above; that the aircraft is registered with the Federal Aviation Administration in accordance with Section 501 of the Federal Aviation Act of 1958, and applicable Federal Aviation Regulations; and that the aircraft has been inspected and is airworthy for the flight described.

X

DATE: 3/30/71 | NAME AND TITLE *(Print or type)*: Crow Inc. | SIGNATURE: Tom C. Barnum, Pres.

VIII. AIRWORTHINESS DOCUMENTATION (FAA use only)

- [ ] A. Operating Limitations and Markings in Compliance with FAR 91.31 as Applicable
- [ ] B. Current Operating Limitations Attached
- [ ] C. Data, Drawings, Photographs, etc. *(Attach when required)*
- [ ] D. Current Weight and Balance Information Available in Aircraft
- [ ] E. Major Repair and Alteration, FAA 337 *(Attach when required)*
- [ ] F. This Inspection Recorded in Aircraft Records
- [ ] G. Statement of Conformity, FAA Form 317 *(Attach when required)*
- [ ] H. Foreign Airworthiness Certification for Import Aircraft *(Attach when required)*
- [ ] I. Previous Airworthiness Certificate Issued in Accordance with FAR _____ CAR _____ *(Original attached)*
- [ ] J. Current Airworthiness Certificate Issued in Accordance with FAR _____ *(Copy attached)*

U.S. GOVERNMENT PRINTING OFFICE : 1969 O—347-330

FAA AIRCRAFT REGISTRY
CAMERA NO. 5 DATE: 6-23-83

UNITED STATES OF AMERICA
DEPARTMENT OF TRANSPORTATION FEDERAL AVIATION ADMINISTRATION

SPECIAL AIRWORTHINESS CERTIFICATE

A	CLASSIFICATION:	SPECIAL FLIGHT PERMIT	
	PURPOSE	OPERATION IN EXCESS OF MAX. CERT. T.O. WEIGHT	
B	MANU-FACTURER	NAME	N/A
		ADDRESS	N/A
C	FLIGHT	FROM	SUVA, FIJI ISLANDS
		TO	SAN FRANCISCO, CALIFORNIA
D	N-- 2442H		SERIAL NO. J-13
	BUILDER GRUMMAN		MODEL G-73
E	DATE OF ISSUANCE 4/1/71		EXPIRES 6/1/71
	OPERATING LIMITATIONS DATED 4/1/71		ARE A PART OF THIS CERTIFICATE
	SIGNATURE OF FAA REPRESENTATIVE R. A. KUEHN		DESIGNATION OR OFFICE NO. SFO IFO 6-0-52

Any alteration, reproduction, or misuse of this certificate may be punishable by a fine not exceeding $1,000 or imprisonment not exceeding 3 years, or both. THIS CERTIFICATE MUST BE DISPLAYED IN THE AIRCRAFT IN ACCORDANCE WITH APPLICABLE FEDERAL AVIATION REGULATIONS.

FAA FORM 8130-7 (3-69) SUPERSEDES FAA FORMS 1382-B; 8100-3; 8130-5

SEE REVERSE SIDE

FAA AIRCRAFT REGISTRY
CAMERA NO. 2 DATE: 6-23-83

A	This airworthiness certificate is issued under the authority of the Federal Aviation Act of 1958 and the Federal Aviation Regulations (FAR).
B	This airworthiness certificate authorizes the manufacturer named on the reverse side to conduct production flight tests, and only production flight tests, of aircraft registered in his name. No person may conduct production flight tests under this certificate: (1) Carrying persons or property for compensation or hire; and/or (2) Carrying persons not essential to the purpose of the flight.
C	This airworthiness certificate authorizes the flight specified on the reverse side for the purpose shown in Block A.
D	This airworthiness certificate certifies that, as of the date of issuance, the aircraft to which issued has been inspected and found to meet the requirements of the applicable FAR. The aircraft does not meet the requirements of the applicable comprehensive and detailed airworthiness code as provided by Annex 8 to the Convention On International Civil Aviation. No person may operate the aircraft described on the reverse side: (1) except in accordance with the applicable FAR and in accordance with conditions and limitations which may be prescribed by the Administrator as part of this certificate; (2) over any foreign country without the special permission of that country.
E	Unless sooner surrendered, suspended, or revoked, this airworthiness certificate is effective for the duration and under the conditions prescribed in FAR Part 21, Section 21.181 or 21.217.

Aircraft Make: Grumman Mallard Model: G73

Serial No: J-13 Ident. Marks: N2442H Issue Date: 3/30/71

OPERATING LIMITATIONS

4. Acrobatics are prohibited.

5. Use of autopilot while in overweight condition is prohibited.

6. Weather conditions with moderate to severe turbulence should be avoided.

7. When an overweight landing is made or the aircraft has been flown through moderate or severe turbulence while in an overweight condition, the aircraft must be inspected for damage after landing. The inspections performed and the findings must be entered in the aircraft log. The pilot must determine, before the next takeoff, that the aircraft is airworthy.

8. When operated in the overweight condition, the cruising speed (Vc) shall not exceed 220 m.p.h. and the maximum speed (Vne) shall not exceed 270 m.p.h.

9. Operation in the overweight condition must be conducted to avoid areas having heavy air traffic, to avoid cities, towns, villages, and congested areas, or any other areas where such flights might create hazardous exposure to person or property on the ground.

10. Prior to requesting clearance to takeoff position, the pilot in command must advise the tower of the overweight condition and of any limitations with respect to a specific runway or prescribed meteorological conditions.

11. This aircraft does not comply with the International Airworthiness Standards of Annex 8 to the Convention on International Civil Aviation when operated at a weight in excess of its maximum certificated takeoff weight because of additional fuel, fuel carrying facilities, and navigation equipment.

Model: 823

Issue Date:

OPERATING LIMITATIONS

[illegible] are prohibited.

[illegible] Takeoff in overweight condition is prohibited.

[illegible] Turbulence to severe turbulence [illegible].

7. [illegible] landing is made or the aircraft has [illegible] a severe turbulence while in an overweight condition, the aircraft must be inspected for damage after landing. The [illegible] and findings must be entered in the [illegible] prior to the next takeoff, that the aircraft airworthy.

8. When operated in the overweight condition, the [illegible] speed (Vne) shall not exceed 320 m.p.h. and the maximum speed (Vne) shall not exceed 270 m.p.h.

9. Operation in the overweight condition [illegible] heavy air traffic, to avoid [illegible], [illegible] areas, or any other area where such flights might [illegible] exposure to person or property on the ground.

10. Prior to requesting clearance to takeoff position, the pilot in command must advise the tower of the overweight condition and of any limitations with respect to a specific runway or runway-related meteorological conditions.

11. This aircraft does not comply with the International Airworthiness Standards of Annex 8 to the Convention on International Civil Aviation when operated at a weight in excess of its maximum certificated takeoff weight because of additional fuel, fuel carrying facilities, and navigation equipment.

RECEIVED

MAR 31 14 24z71

OAK P1 PSF

GG NESUYA
312200 KOAKYA

VERRAN CIVAIR SUVA. REFERENCE YOUR 3/30/71 MESSAGE TO FAA.
REGISTRATION BRANCH OKLAHOMA CITY NEEDS NAME AND TITLE OF
CIVAIR OFFICIAL.
CUNNINGHAM SFP/1 312220

RECEIVED

MAR 32 06 56z71

IFO

RECEIVED

APR 1 07 07z71

PSF D1 OAK A NESUYA
JJ KOAKYA
010037 NESUYA
REF YR CFP/1 312220 FROM CUNNINGHAM STOP NAME OF OFFICIAL
J. V. VERRAN TITLE CONTROLLER OF TRANSPORT AND CIVIL AVIATION.
SUVA FIJI.

8-405-686-2117 KORDISH

FAA AIRCRAFT REGISTRY
CAMERA NO. 2 DATE: 6-23-83